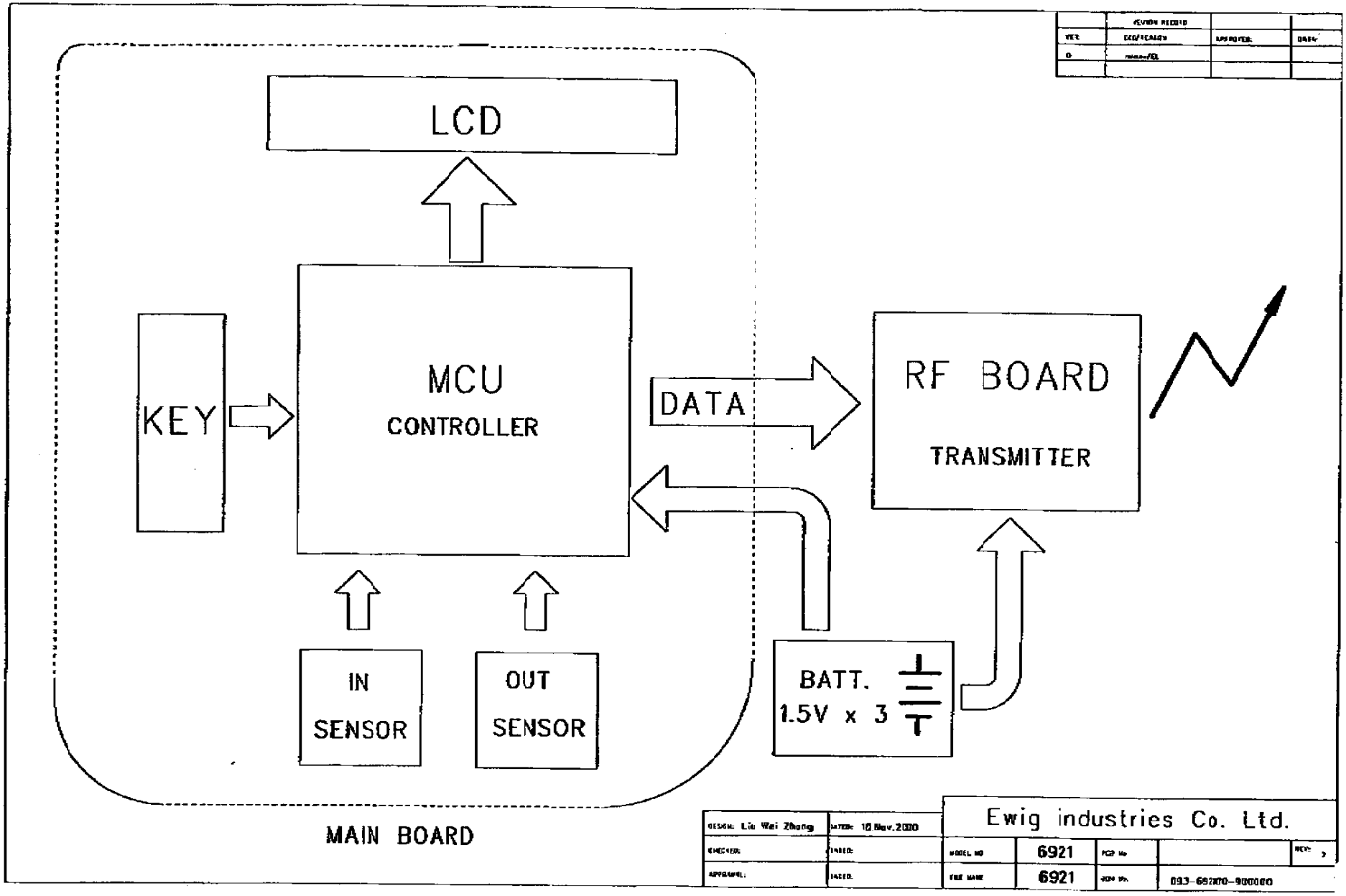
LCD
KEY
MCU
CONTROLLER
DATA
RF BOARD
TRANSMITTER
IN
SENSOR
OUT
SENSOR
BATT.
1.5V x 3
MAIN BOARD
Ewig industries Co. Ltd.
6921
6921