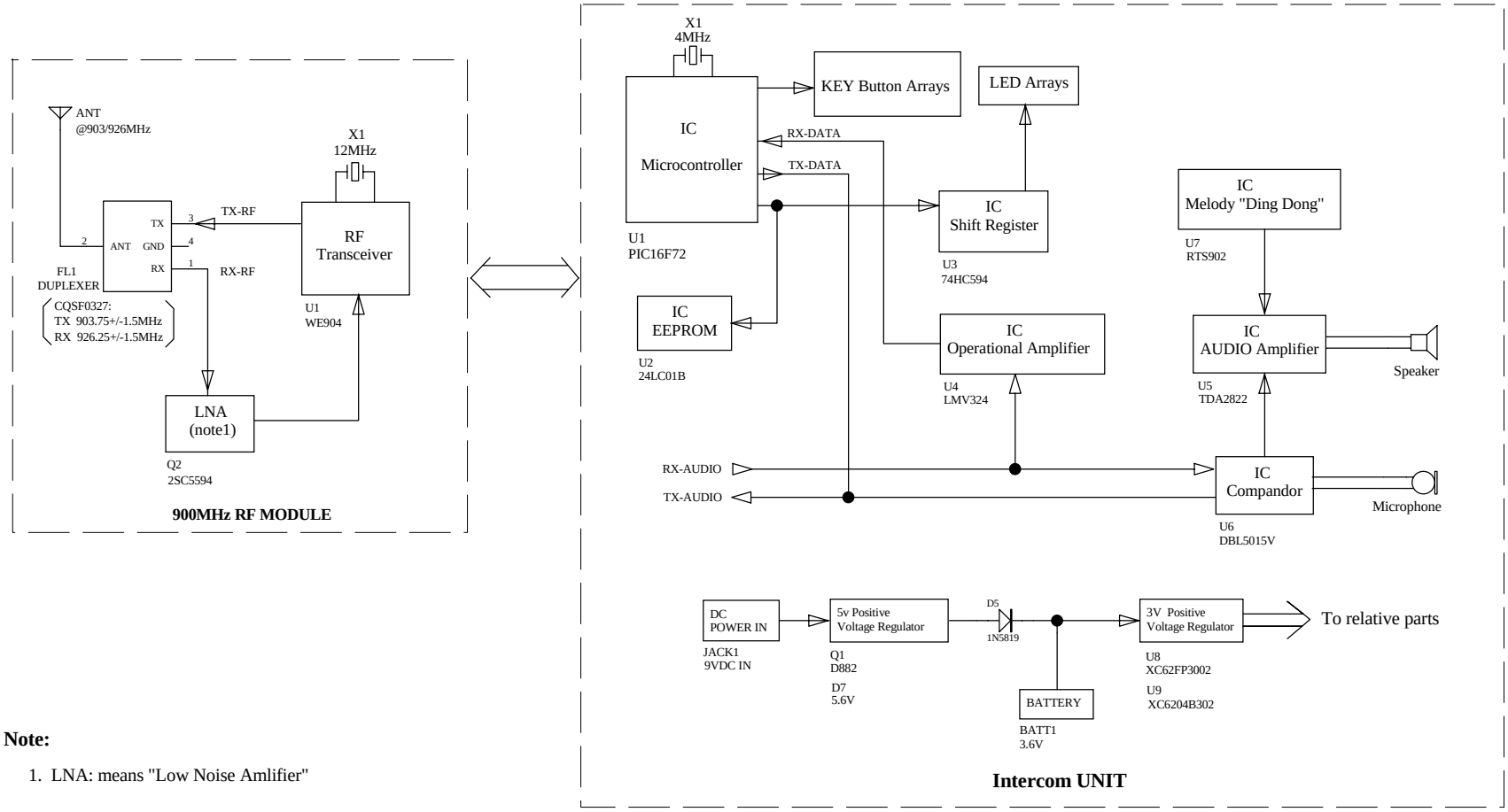

Note:

1. LNA: means "Low Noise Amlifier"

DOC NAME:	Block Diagram	SMART ELECTRONIC INDUSTRIAL(DONG GUAN)CO.,			
DESIGN:		MODEL:	RF1252	DOC NO:	
CHECKED BY:		NAME:	Block Diagram for IDU	REV:	A
PERMITTED BY:		DATE:		PAGE	1 of 1