# RT-710

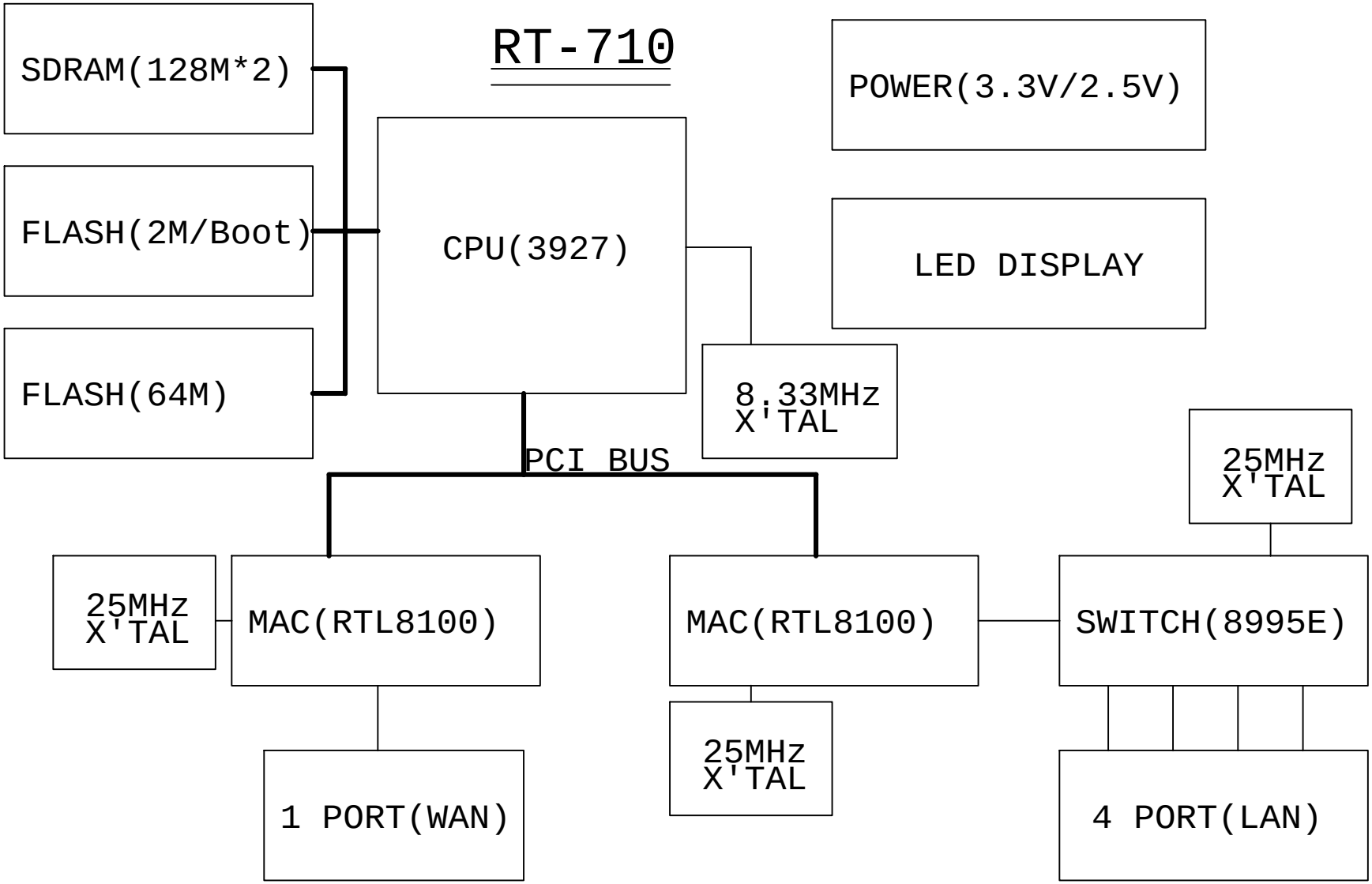


| | | |
|---|---|---|
| Title RT-710 | | |
| Size A | Document Number {Doc} | Rev X1 |
| Date: Wednesday, August 15, 2001 | Sheet 1 of 1 | |