EXHIBIT D

Circuit Diagram

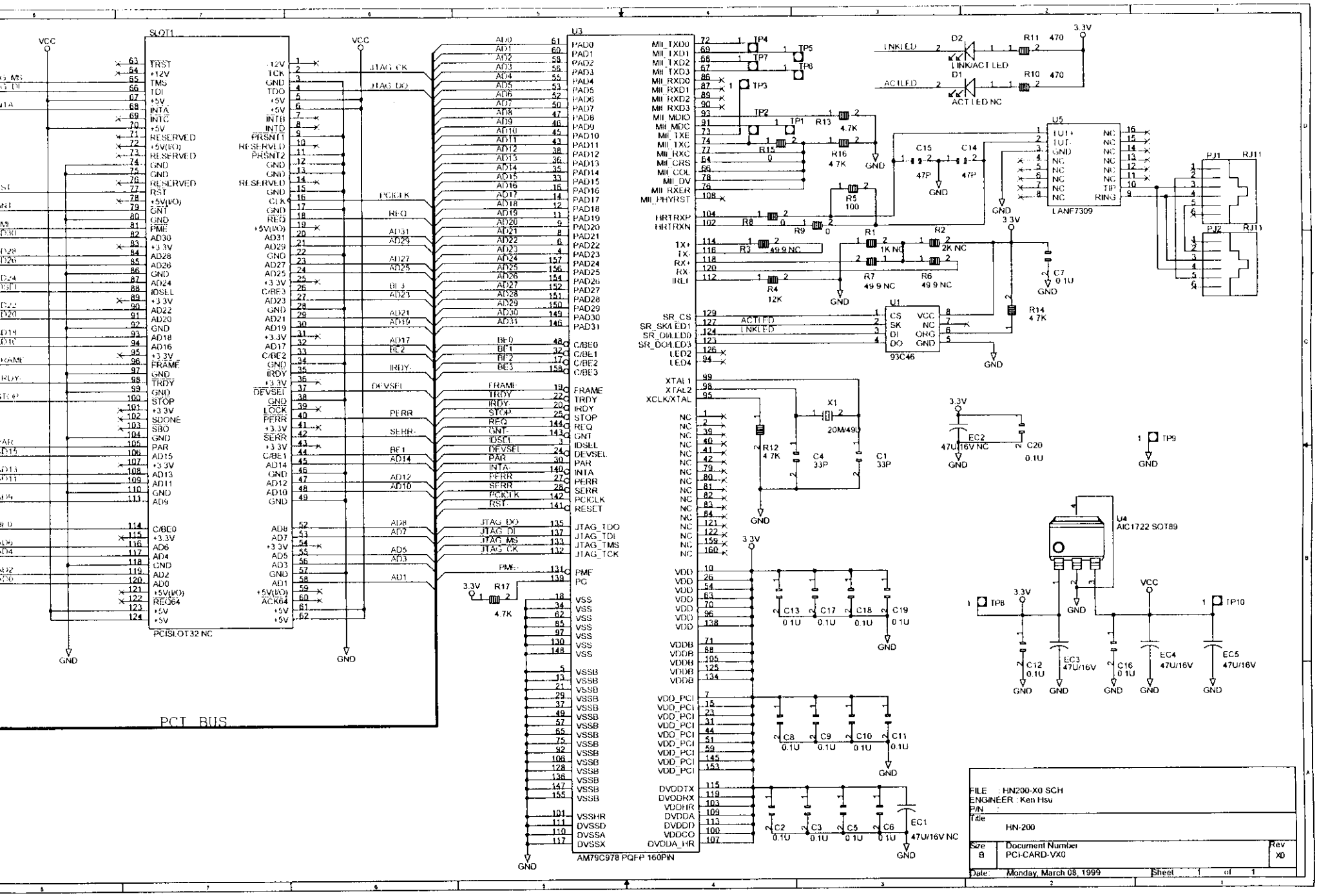
SLOT1
PCISLOT32 NC
PCI BUS
U3
AM79C978 PQFP 160PIN
U5
LANF7309
U1
93C46
U4
AIC1722 SOT89
PJ1
RJ11
PJ2
RJ11
D2
LINK/ACT LED
D1
ACT LED NC
X1
20M/49U
EC1
47U/16V NC
EC2
47U/16V NC
EC3
47U/16V
EC4
47U/16V
EC5
47U/16V
VCC
GND
3.3V
FILE : HN200-X0 SCH
ENGINEER : Ken Hsu
P/N :
Title
HN-200
Size
B
Document Number
PCI-CARD-VX0
Rev
X0
Date: Monday, March 08, 1999
Sheet 1 of 1

EXHIBIT E

Block Diagram