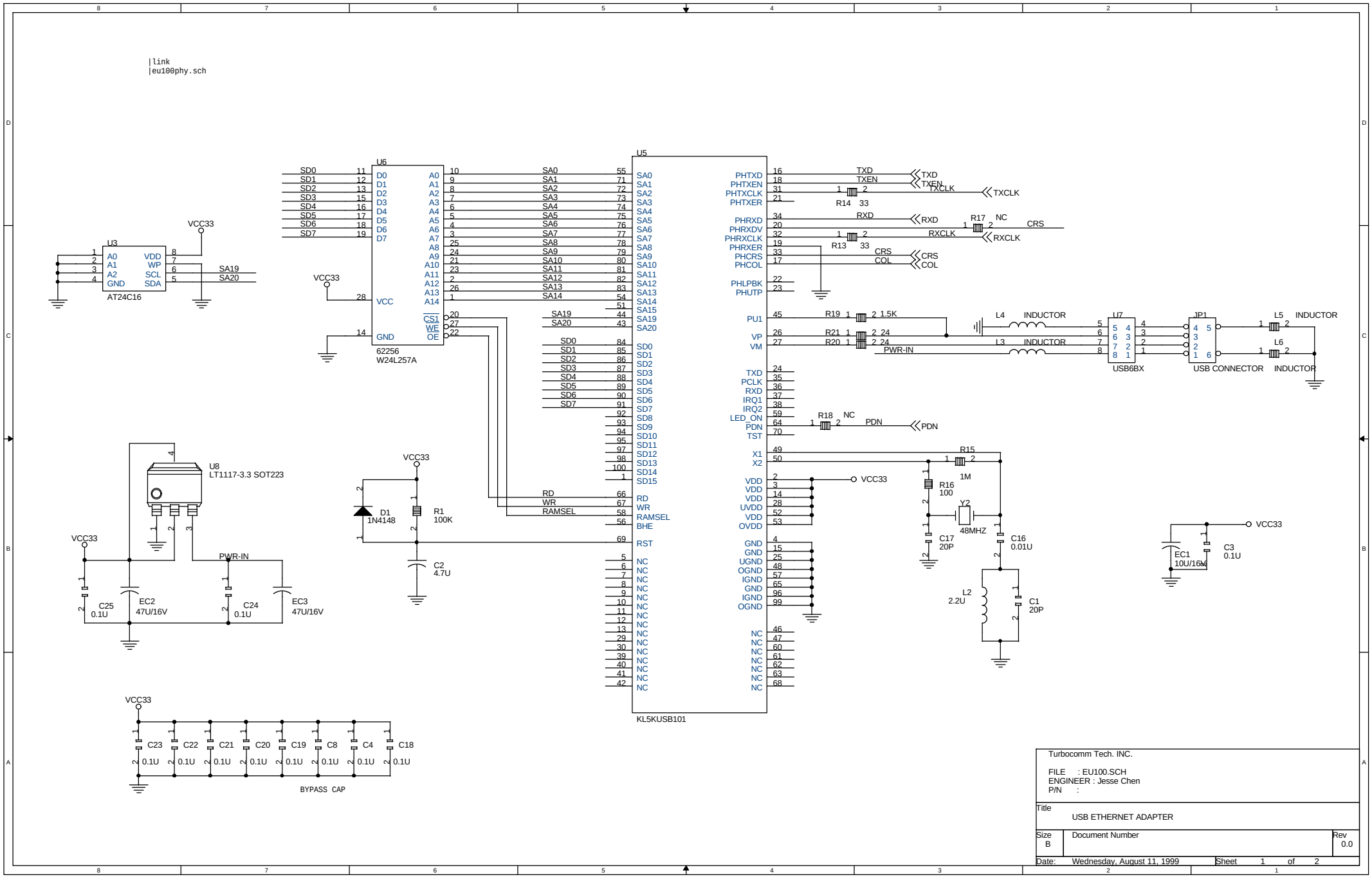
|link
|eu100phy.sch
U3
AT24C16
U6
62256
W24L257A
U5
KL5KUSB101
U7
USB6BX
JP1
USB CONNECTOR
U8
LT1117-3.3 SOT223
BYPASS CAP
VCC33
PWR-IN
Turbocomm Tech. INC.
FILE : EU100.SCH
ENGINEER : Jesse Chen
P/N :
Title
USB ETHERNET ADAPTER
Size
B
Document Number
Rev
0.0
Date: Wednesday, August 11, 1999
Sheet 1 of 2

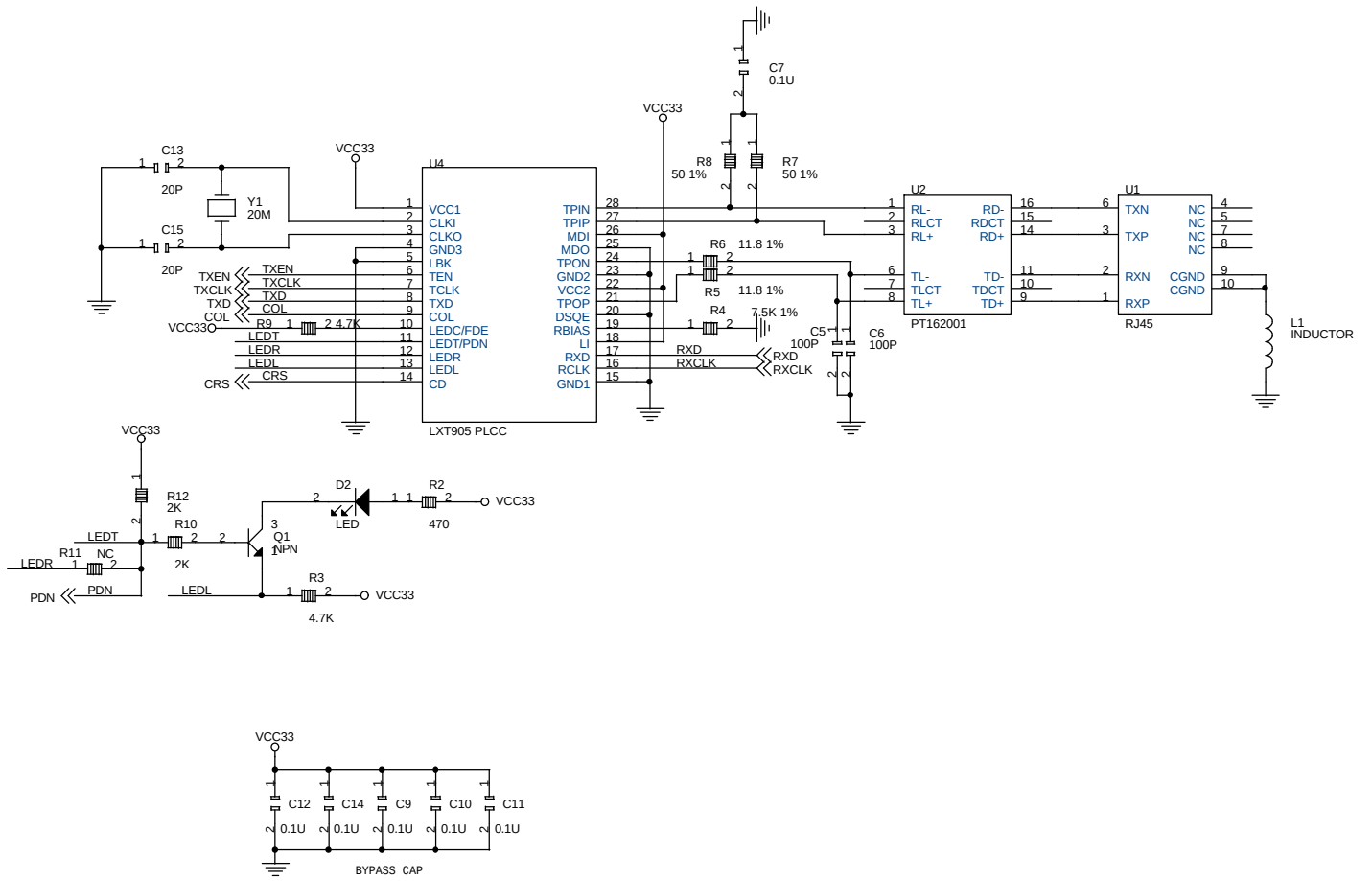

Turbocomm Tech. INC.

FILE : XXXX.SCH
ENGINEER : Jesse Chen
P/N :

Title
USB ETHERNET ADAPTER

Size	Document Number	Rev
B		0.0

Date: Wednesday, August 11, 1999 Sheet 2 of 2