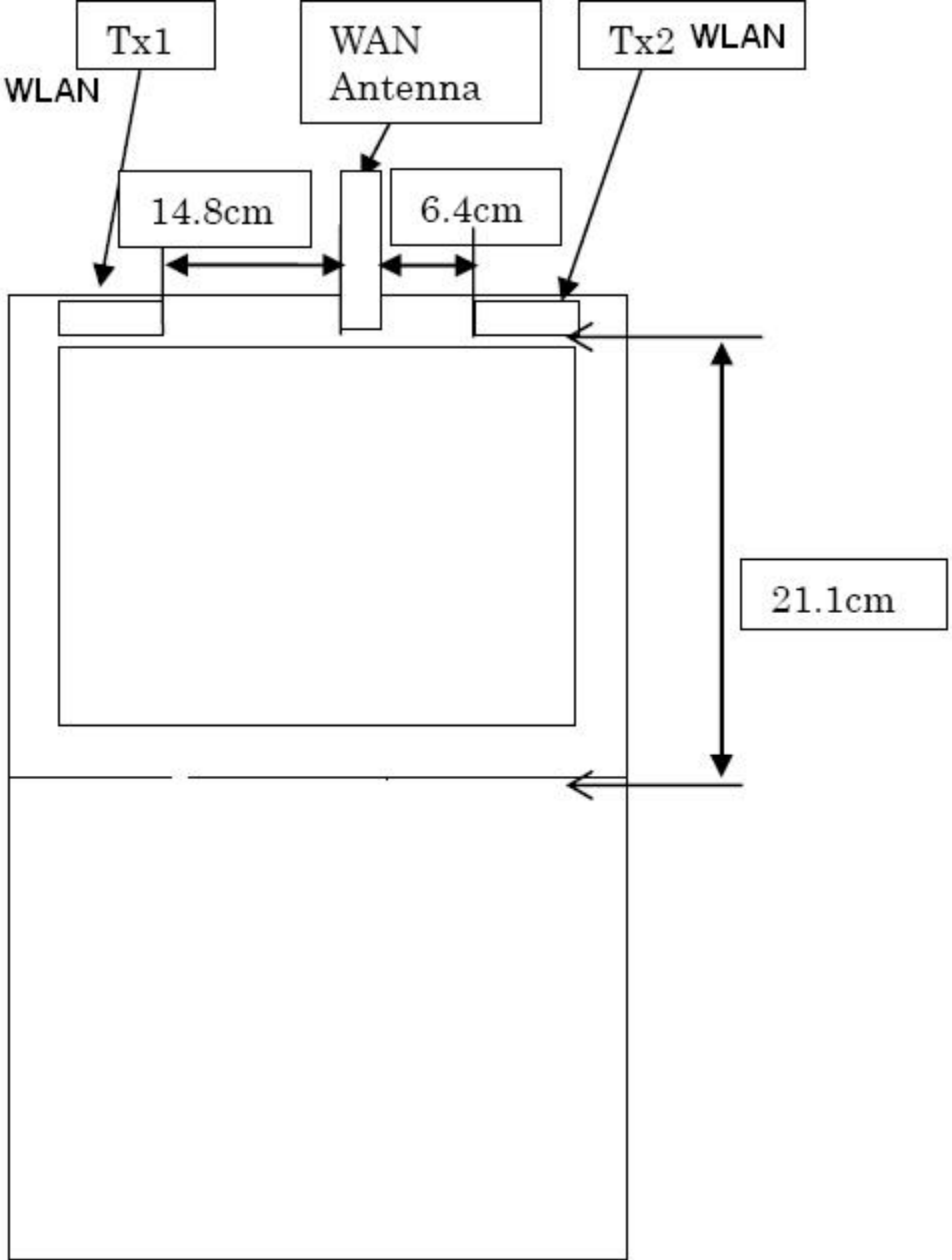
Tx1
WLAN
WAN
Antenna
Tx2 WLAN
14.8cm
6.4cm
21.1cm