CNI – 903M RF Block Diagram

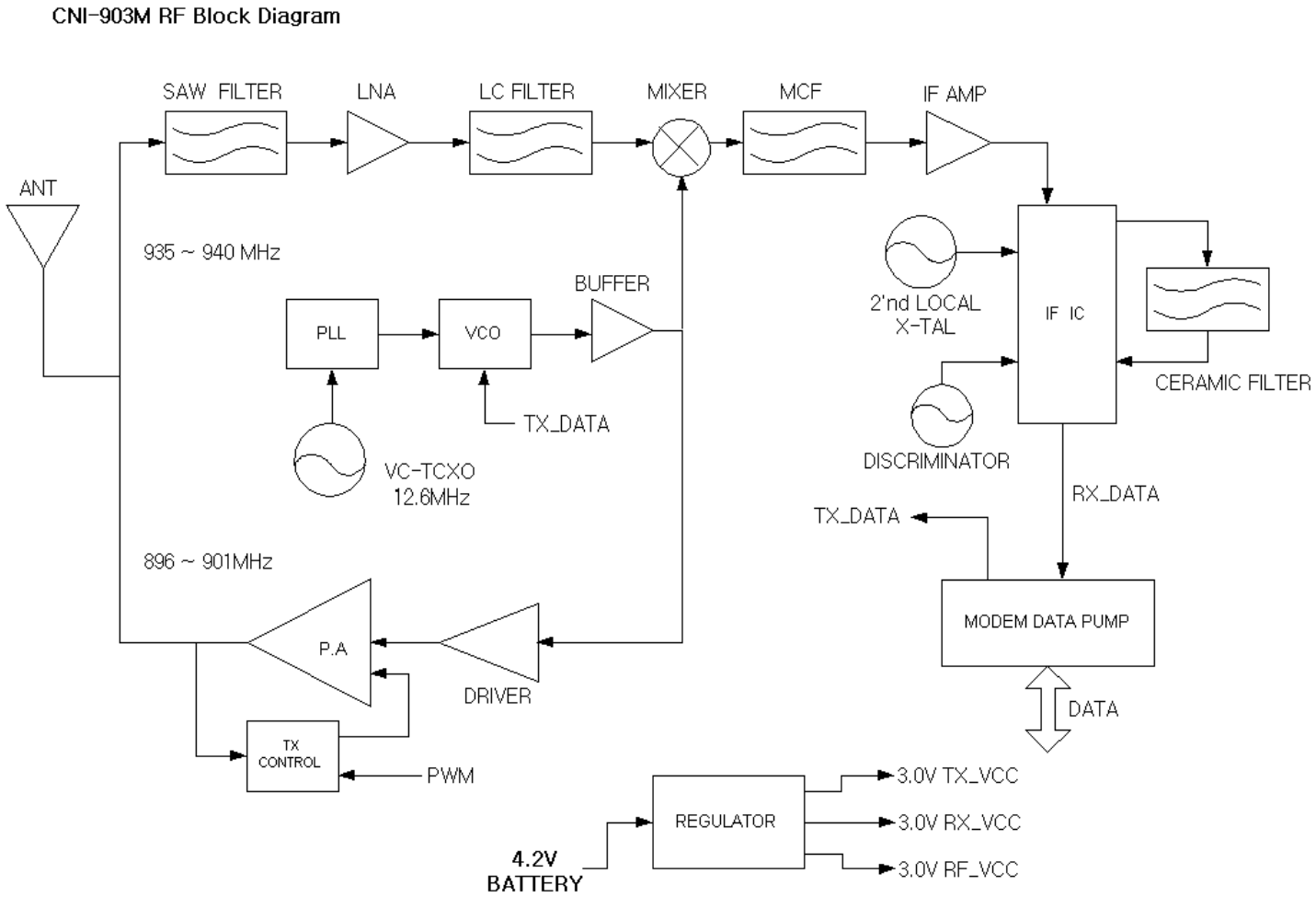

CNI-903M RF Circuit

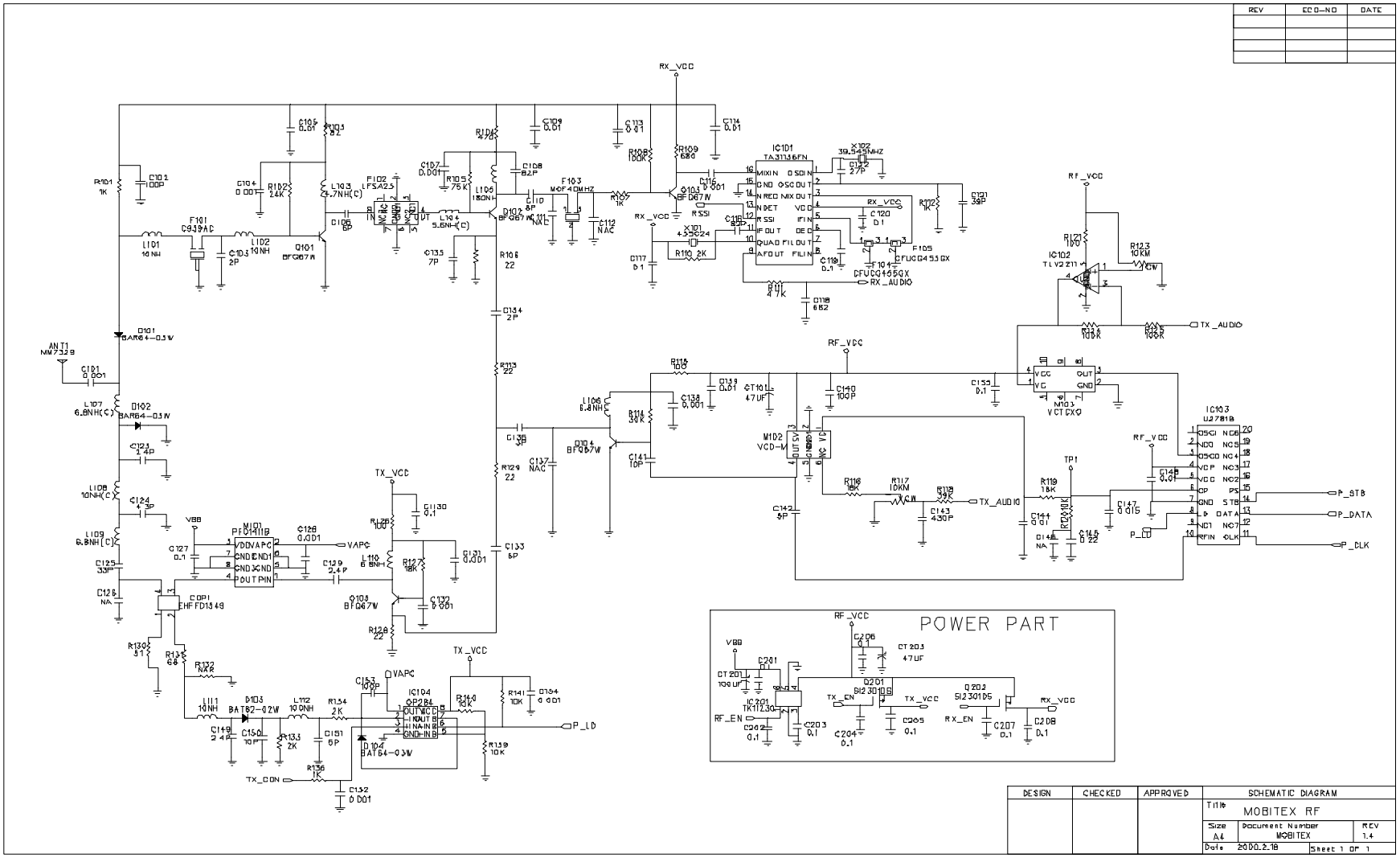

CNI 903M LOGIC BLOCK DIAGRAM

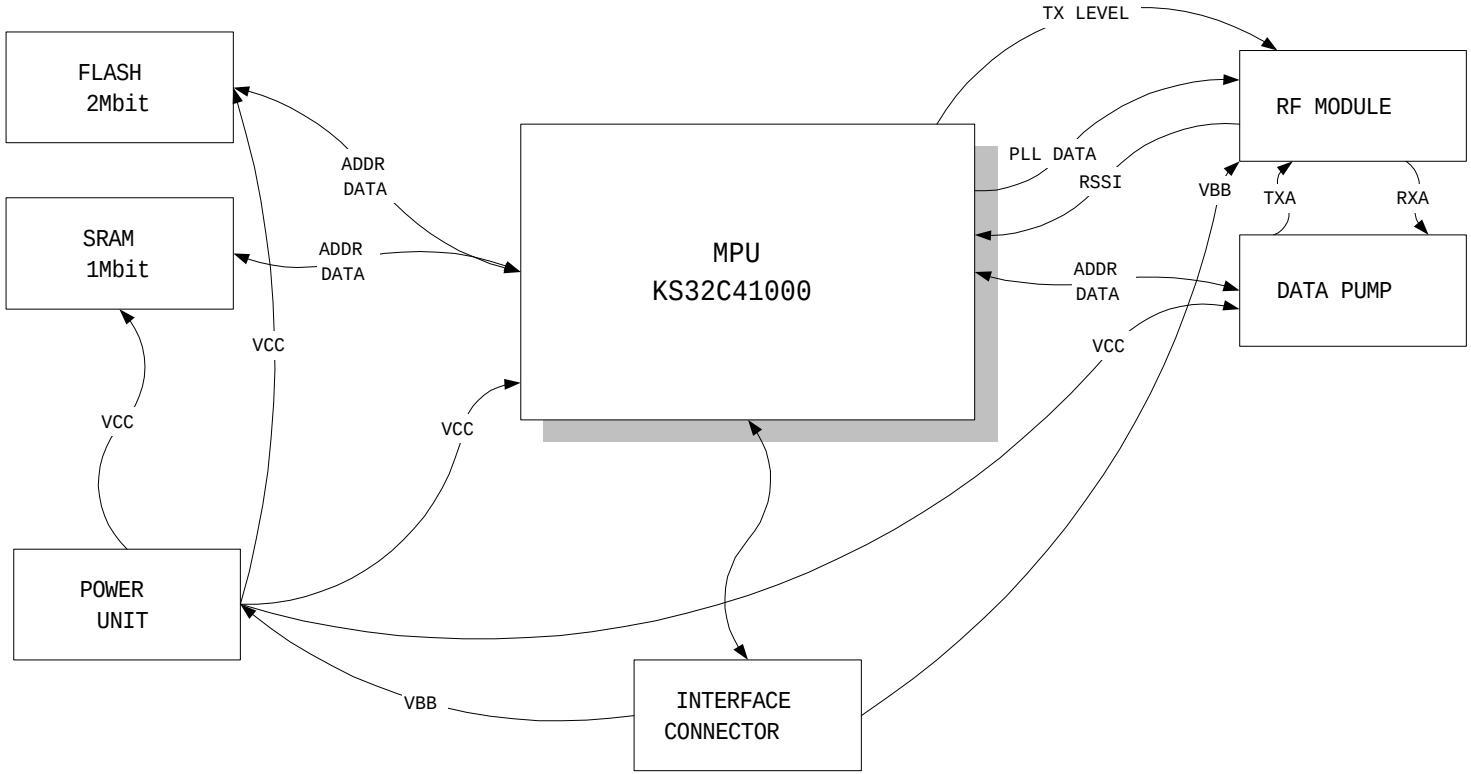

CNI-903M LOGIC Circuit

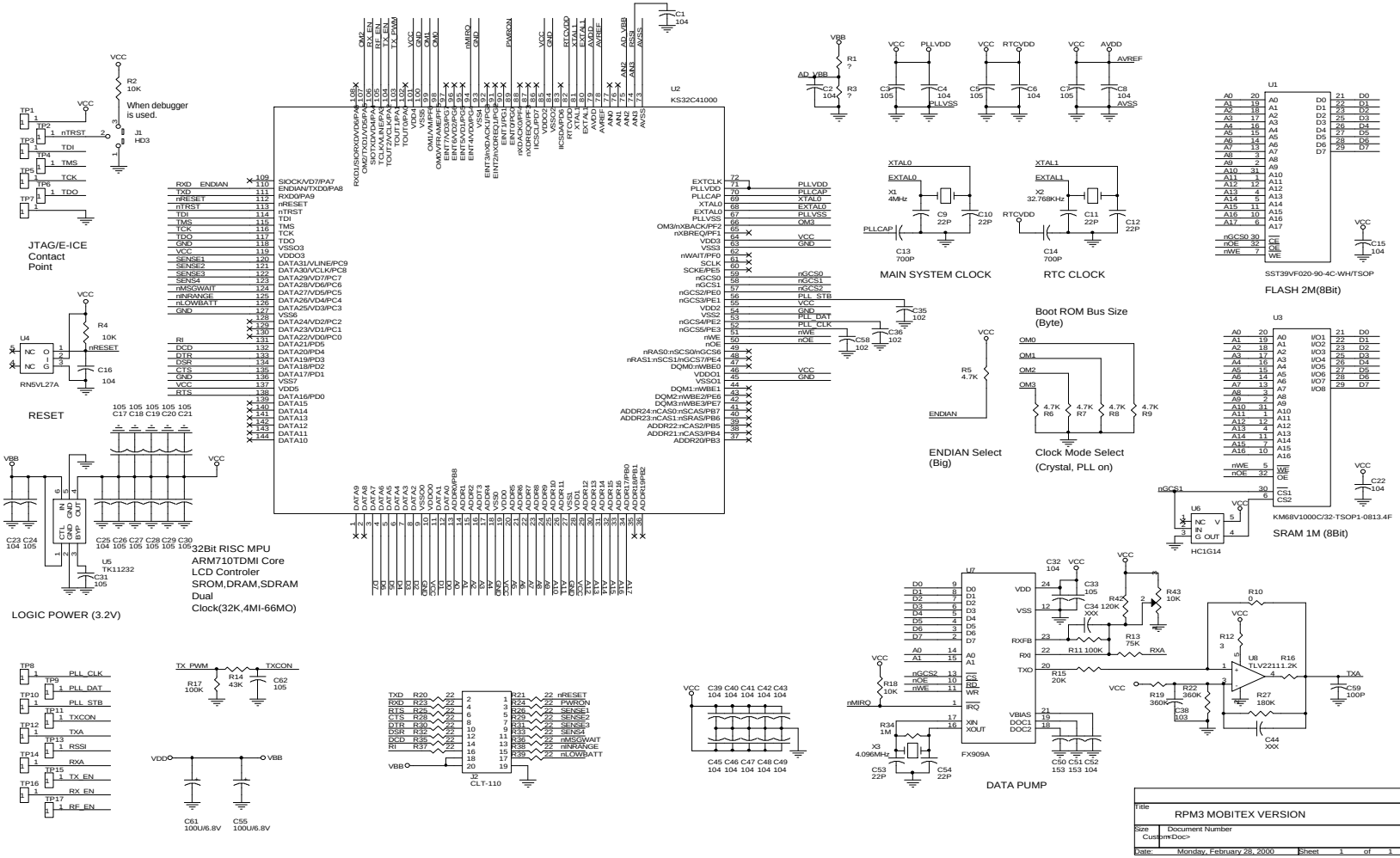

Title: RPM3 MOBITEX VERSION

Size: Custom | Document Number: <Doc> | Rev: 0.9C

Date: Monday, February 28, 2000 | Sheet 1 of 1