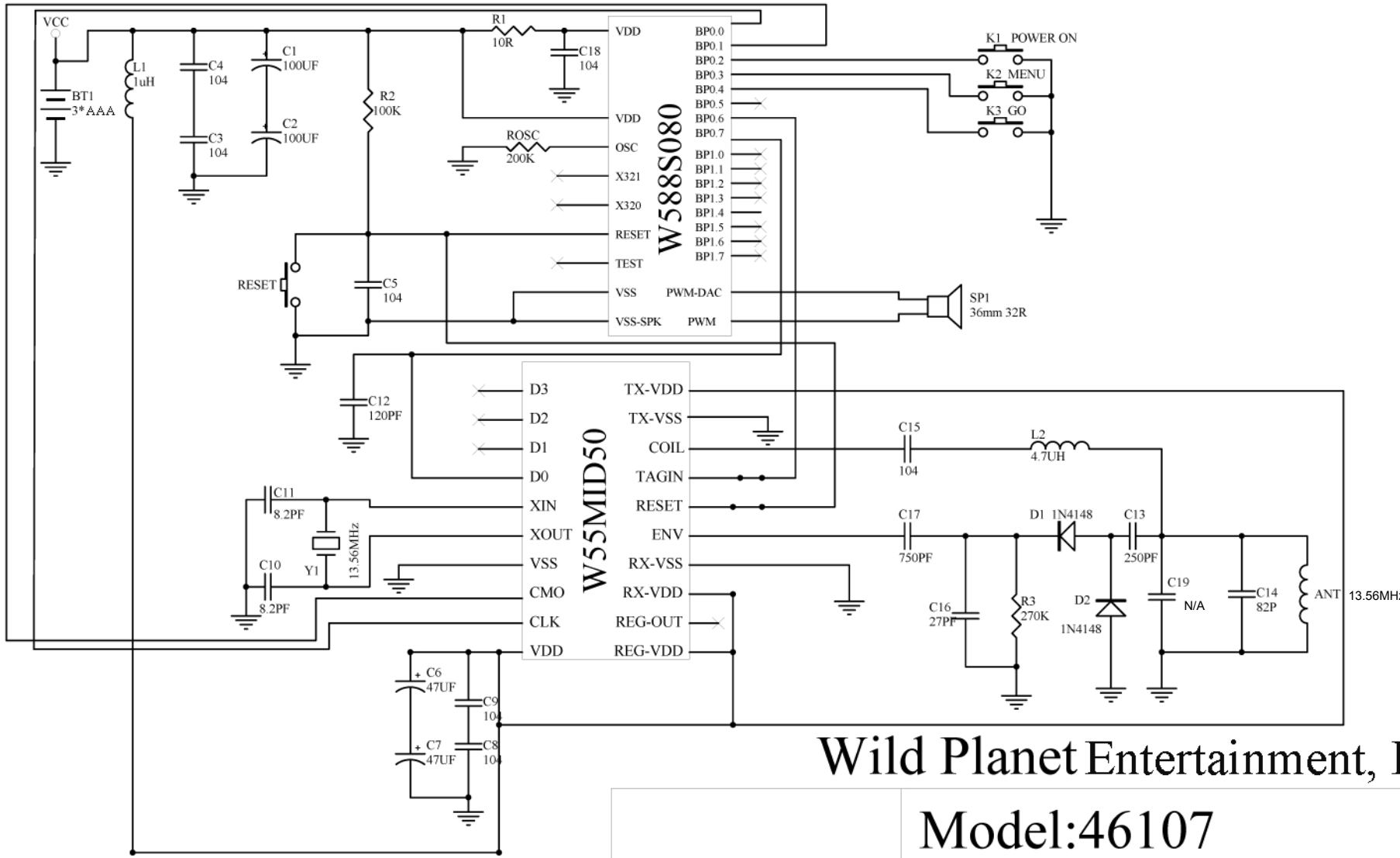

Wild Planet Entertainment, Inc.

Date:2009 October 18	Model:46107
	Woody's Run Around Roundup

Size	FCSM No.	DWG No.	Rev
A4			

Scale	Sheet
	2 of 2