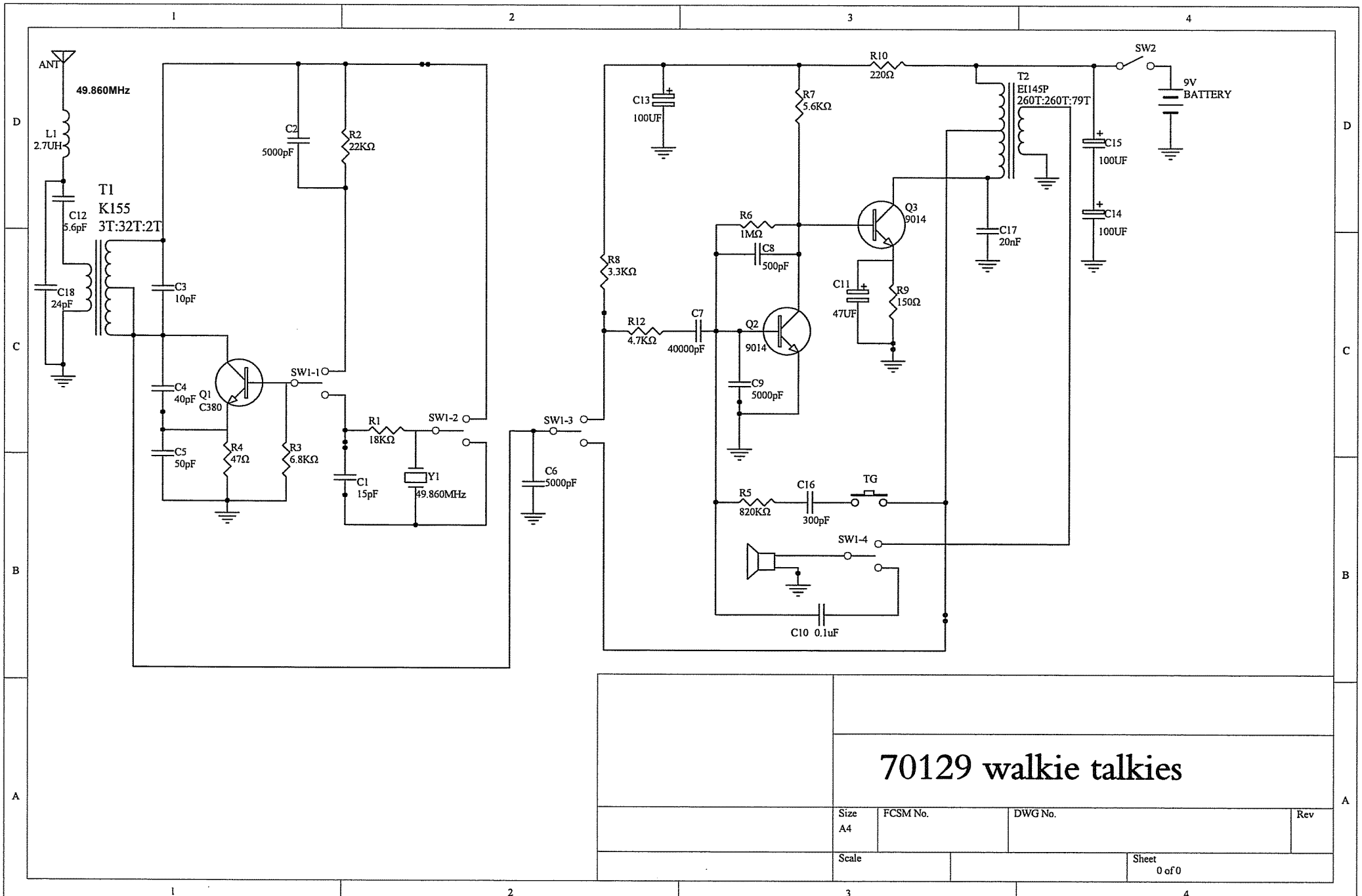
ANT
49.860MHz
L1
2.7UH
C12
5.6pF
C18
24pF
T1
K155
3T:32T:2T
C3
10pF
C4
40pF
Q1
C380
C5
50pF
R4
47Ω
R3
6.8KΩ
C2
5000pF
R2
22KΩ
SW1-1
R1
18KΩ
SW1-2
C1
15pF
Y1
49.860MHz
SW1-3
C6
5000pF
C13
100UF
R8
3.3KΩ
R12
4.7KΩ
C7
40000pF
R7
5.6KΩ
R6
1MΩ
C8
500pF
Q2
9014
C9
5000pF
Q3
9014
C11
47UF
R9
150Ω
R10
220Ω
T2
EI145P
260T:260T:79T
C17
20nF
C15
100UF
C14
100UF
SW2
9V
BATTERY
R5
820KΩ
C16
300pF
TG
SW1-4
C10 0.1uF
70129 walkie talkies
Size
A4
FCSM No.
DWG No.
Rev
Scale
Sheet
0 of 0