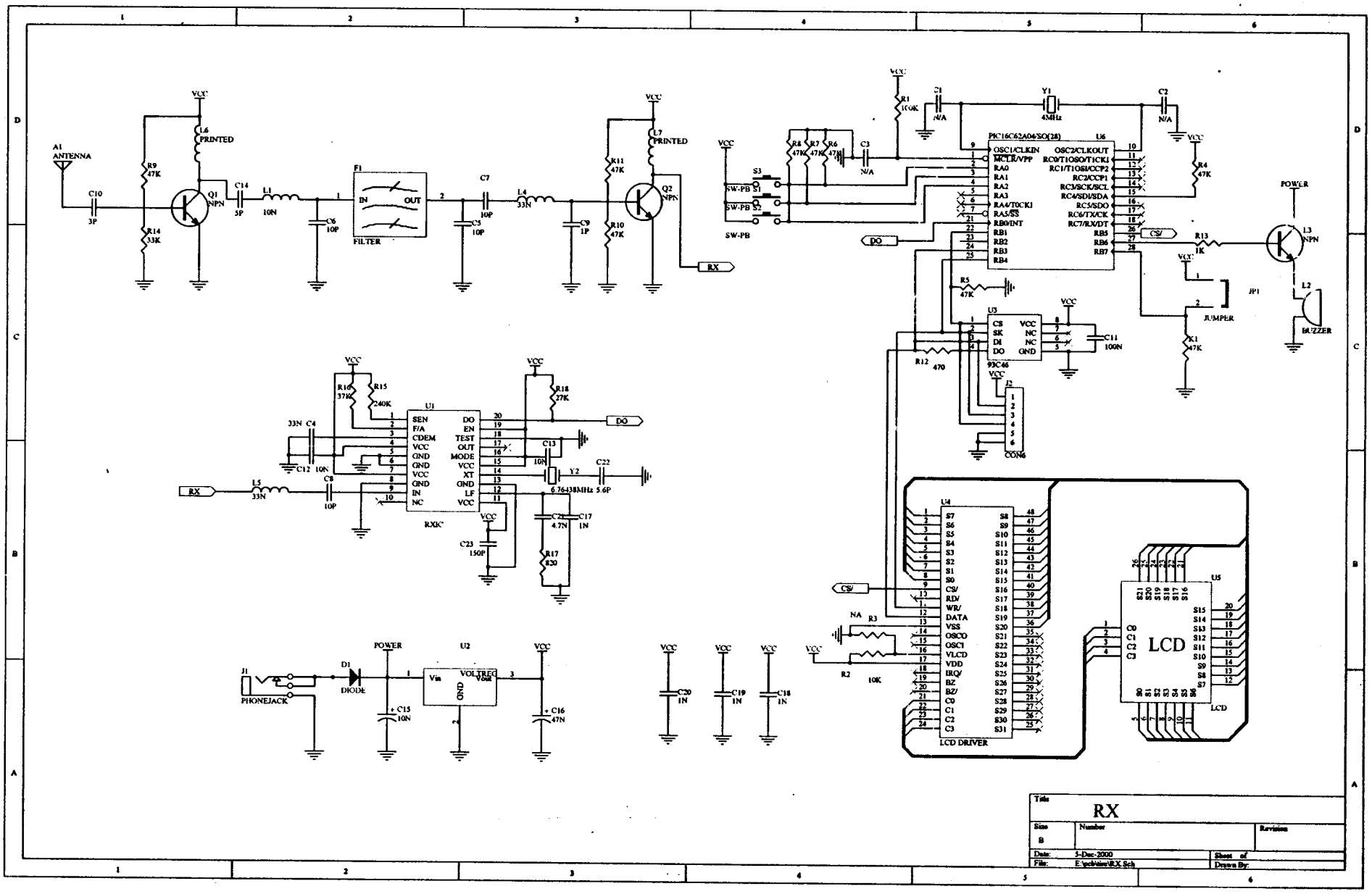

Title	RX
Size: B	Number:
Revision:	
Date: 5-Dec-2000	Sheet of
File: E:\pcb\tine\RX.Sch	Drawn By: