BDX-850-5

Broadband Digital Transceiver GSM-850

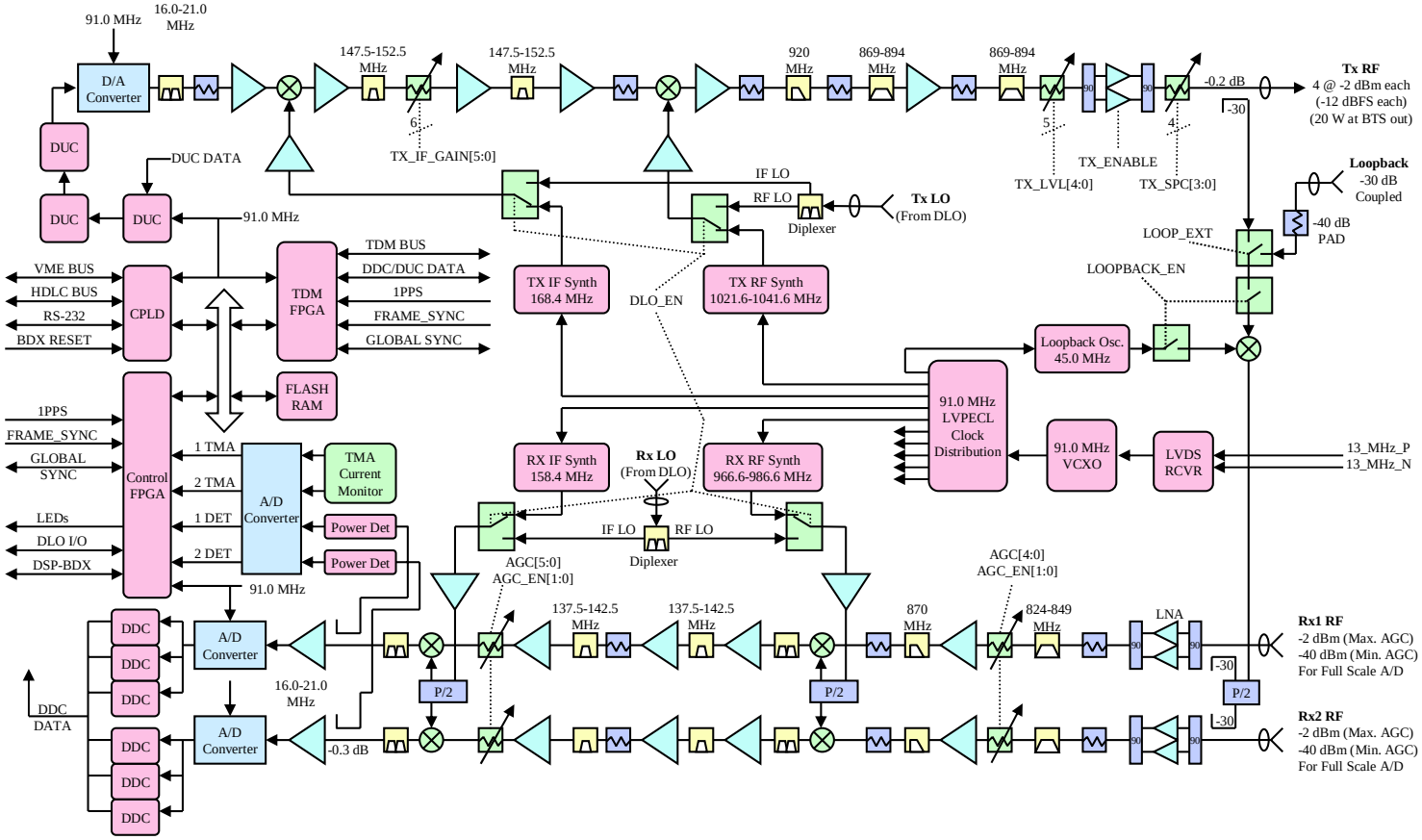

AirNet Proprietary