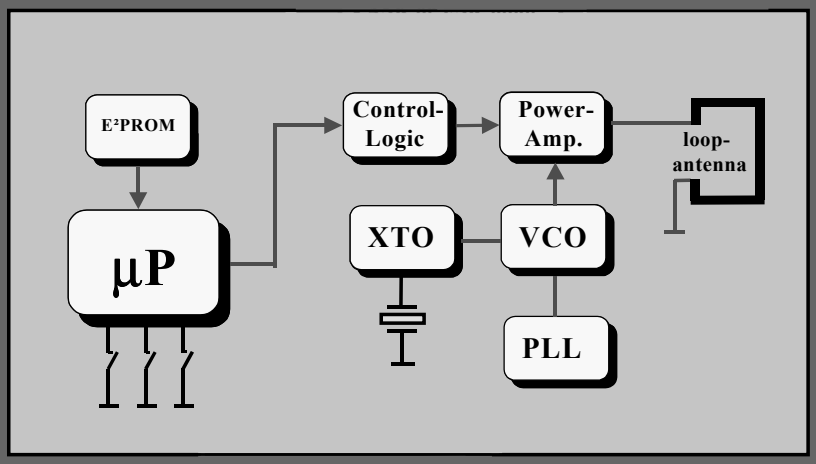RF-Transmitter Block Diagram