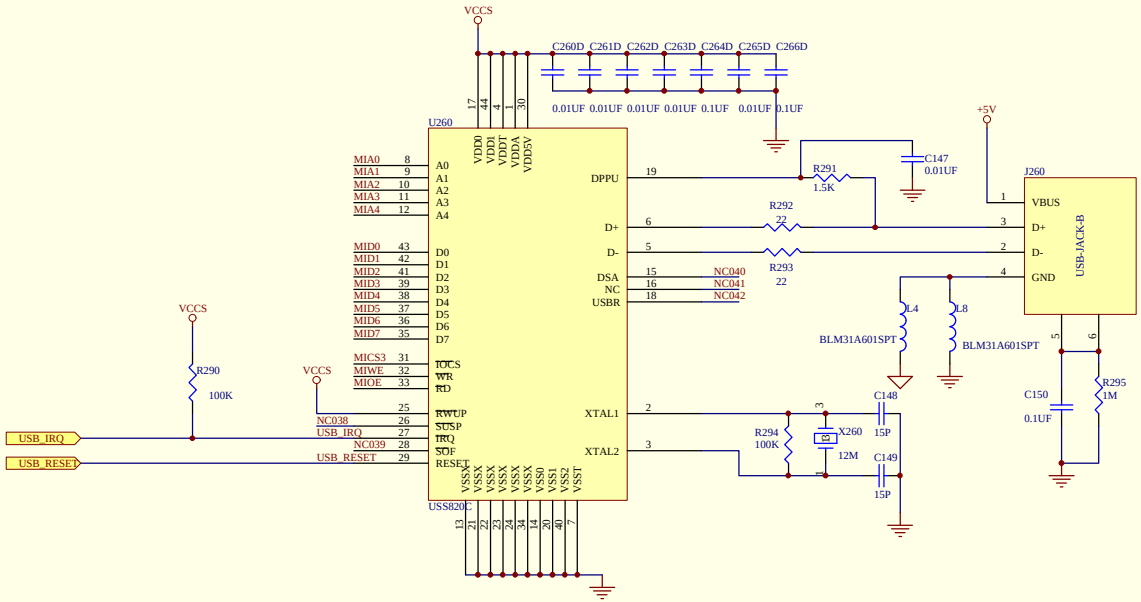

Title
11 Mbps WLAN USB Adapter

Size	Number	Revision
B	USB-USBV03.SCH	03

Date:	1-Sep-2000	Sheet 7 of 7	
File:	\\..\usb-usbv03.sch	Drawn By:	