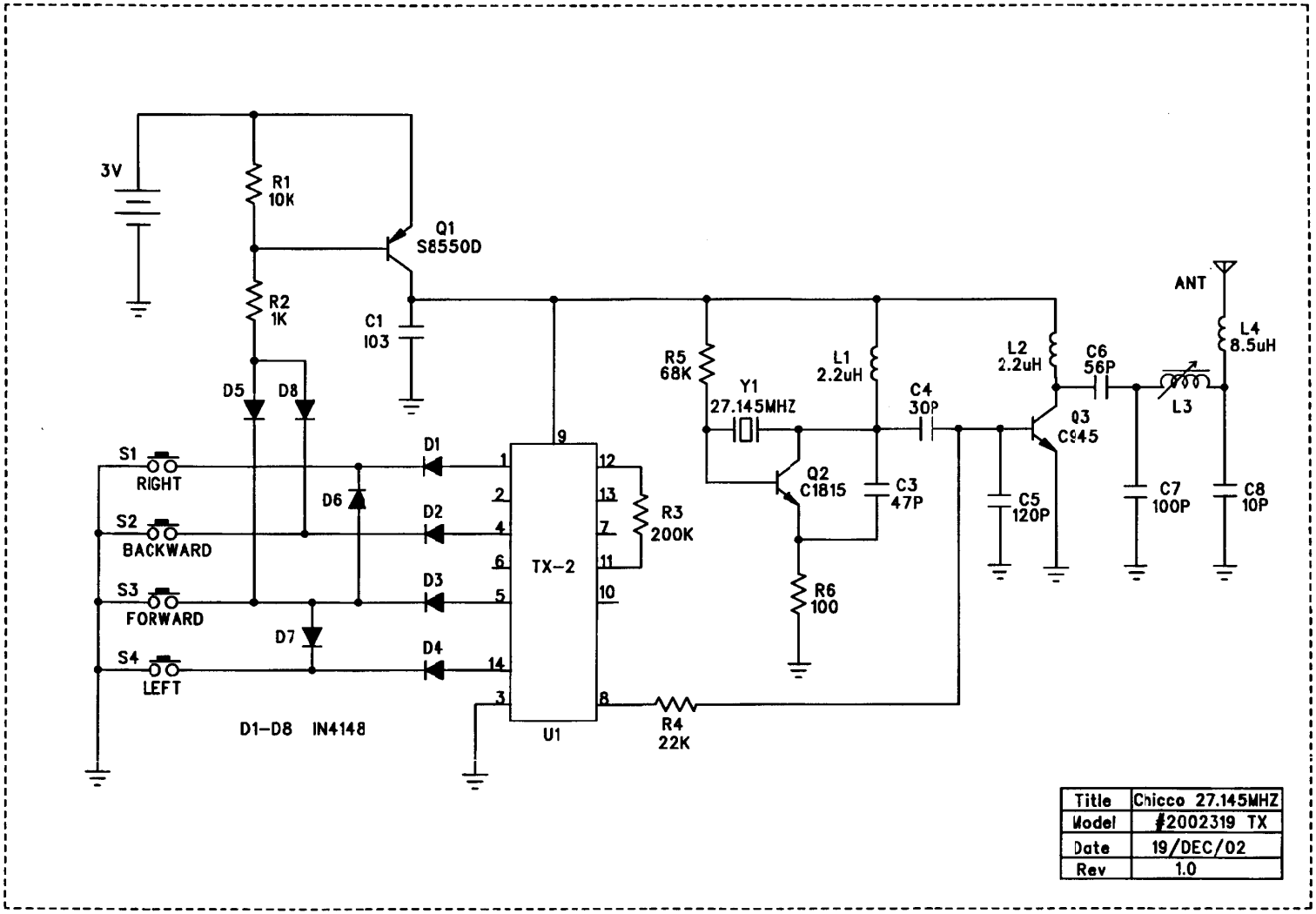

Title	Chicco 27.145MHZ
Model	#2002319 TX
Date	19/DEC/02
Rev	1.0