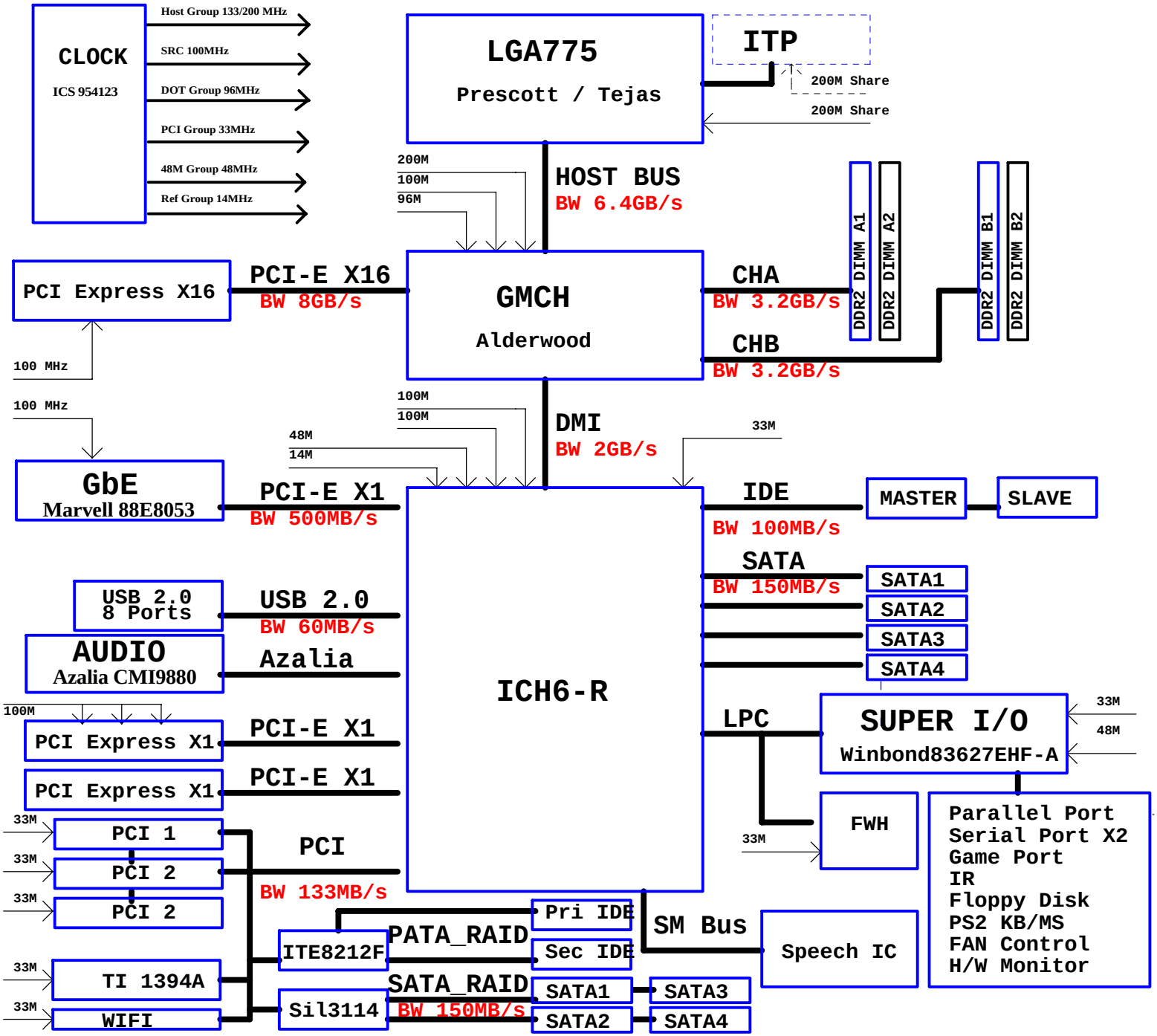# Project Name : P5AD2 Deluxe R1.03