M2Ne_Dothan/MONTARA-855GME_BLOCK_DIAGRAM

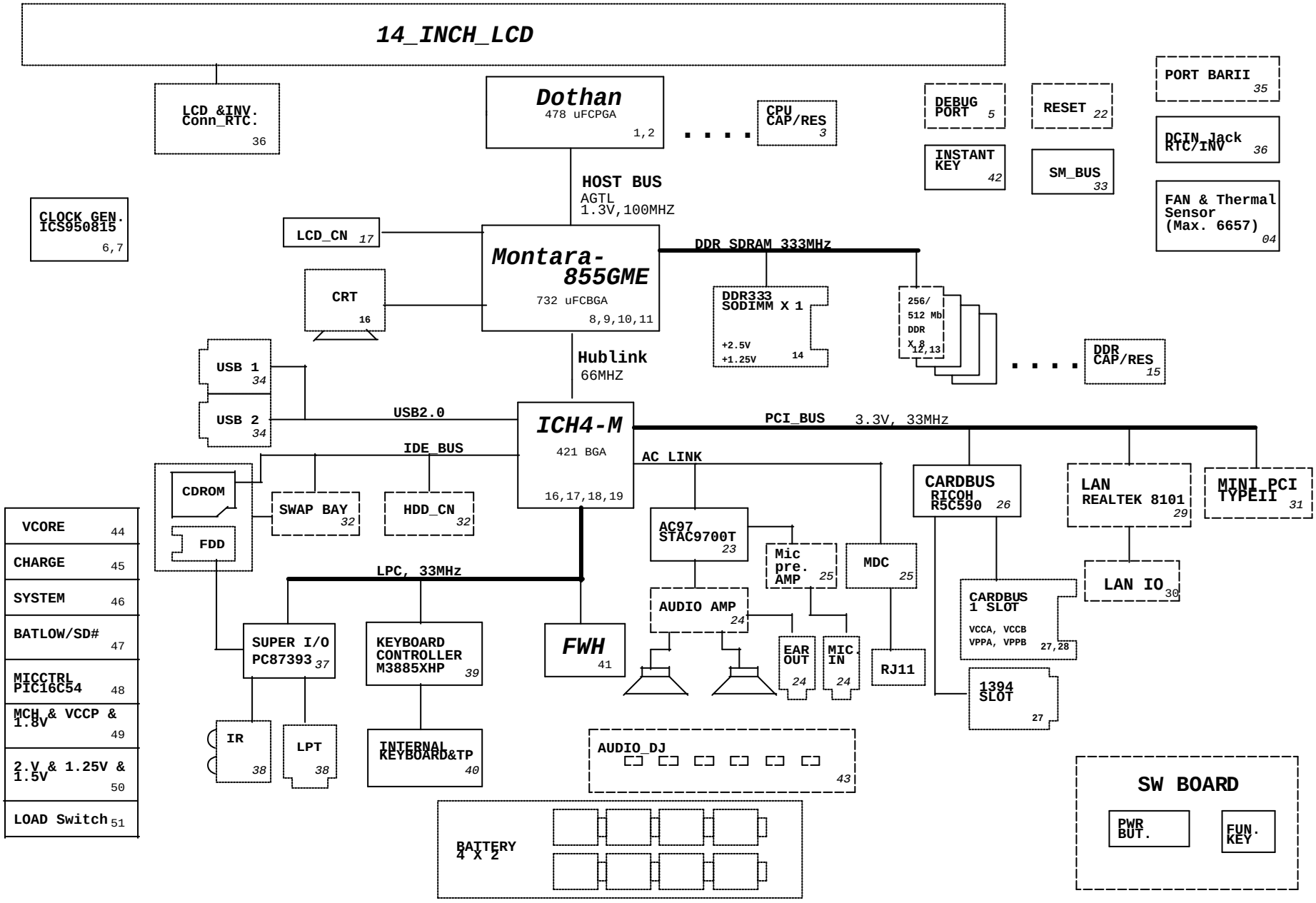

ASUS	PROJECT: M2Ne	REVISION 2.2	DATE: Tuesday, January 06, 2004 SHEET 56 OF 56	DESCRIPTION: BLOCK DIAGRAM	SCHEMATIC FILE NAME : <Doc> LIBRARY DATE :	DESIGN ENGINEER :