Test Laboratory: BTL Inc. Date: 8/7/2017

System Check_B2450

DUT: Dipole 2450 MHz D2450V2;

Communication System: UID 0, CW (0); Frequency: 2450 MHz; Duty Cycle: 1:1
Medium parameters used: f = 2450 MHz; σ = 1.993 S/m; ε_r = 51.223; ρ = 1000 kg/m^3
Ambient Temperature：22.5 ℃; Liquid Temperature：22.4 ℃

DASY Configuration:

- Probe: EX3DV4 - SN7369; ConvF(7.56, 7.56, 7.56); Calibrated: 8/31/2016;
- Sensor-Surface: 2mm (Mechanical Surface Detection), z = 1.0, 31.0
- Electronics: DAE4 Sn1486; Calibrated: 8/23/2016
- Phantom: ELI V5.0 (20deg probe tilt); Type: QD OVA 002 AA; Serial: 1240
- DASY52 52.8.8(1258); SEMCAD X 14.6.10(7373)

Area Scan (9x9x1): Measurement grid: dx=12mm, dy=12mm
Maximum value of SAR (measured) = 20.0 W/kg

Zoom Scan (7x7x7)/Cube 0: Measurement grid: dx=5mm, dy=5mm, dz=5mm
Reference Value = 101.0 V/m; Power Drift = -0.04 dB
Peak SAR (extrapolated) = 27.7 W/kg
SAR(1 g) = 13 W/kg; SAR(10 g) = 5.94 W/kg
Maximum value of SAR (measured) = 20.2 W/kg

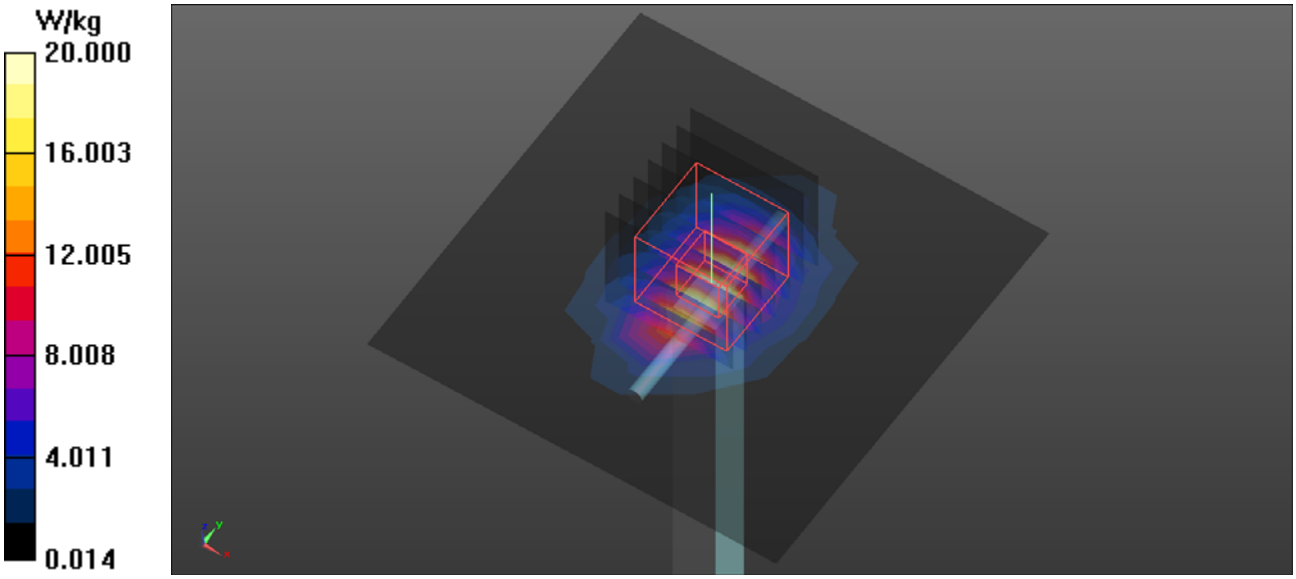

Test Laboratory: BTL Inc. Date: 8/10/2017

System Check_B2450

DUT: Dipole 2450 MHz D2450V2;

Communication System: UID 0, CW (0); Frequency: 2450 MHz; Duty Cycle: 1:1
Medium parameters used: f = 2450 MHz; σ = 1.99 S/m; ε_r = 51.538; ρ = 1000 kg/m^3
Ambient Temperature：22.4 ℃; Liquid Temperature：22.3 ℃

DASY Configuration:

- Probe: EX3DV4 - SN3753; ConvF(7.27, 7.27, 7.27); Calibrated: 5/5/2017;
- Sensor-Surface: 2mm (Mechanical Surface Detection), z = 1.0, 31.0
- Electronics: DAE4 Sn1305; Calibrated: 4/25/2017
- Phantom: ELI V5.0 (20deg probe tilt); Type: QD OVA 002 AA; Serial: 1240
- DASY52 52.8.8(1258); SEMCAD X 14.6.10(7373)

Area Scan (9x9x1): Measurement grid: dx=12mm, dy=12mm
Maximum value of SAR (measured) = 16.8 W/kg

Zoom Scan (7x7x7)/Cube 0: Measurement grid: dx=5mm, dy=5mm, dz=5mm
Reference Value = 93.02 V/m; Power Drift = 0.02 dB
Peak SAR (extrapolated) = 24.5 W/kg
SAR(1 g) = 12.6 W/kg; SAR(10 g) = 5.52 W/kg
Maximum value of SAR (measured) = 18.2 W/kg

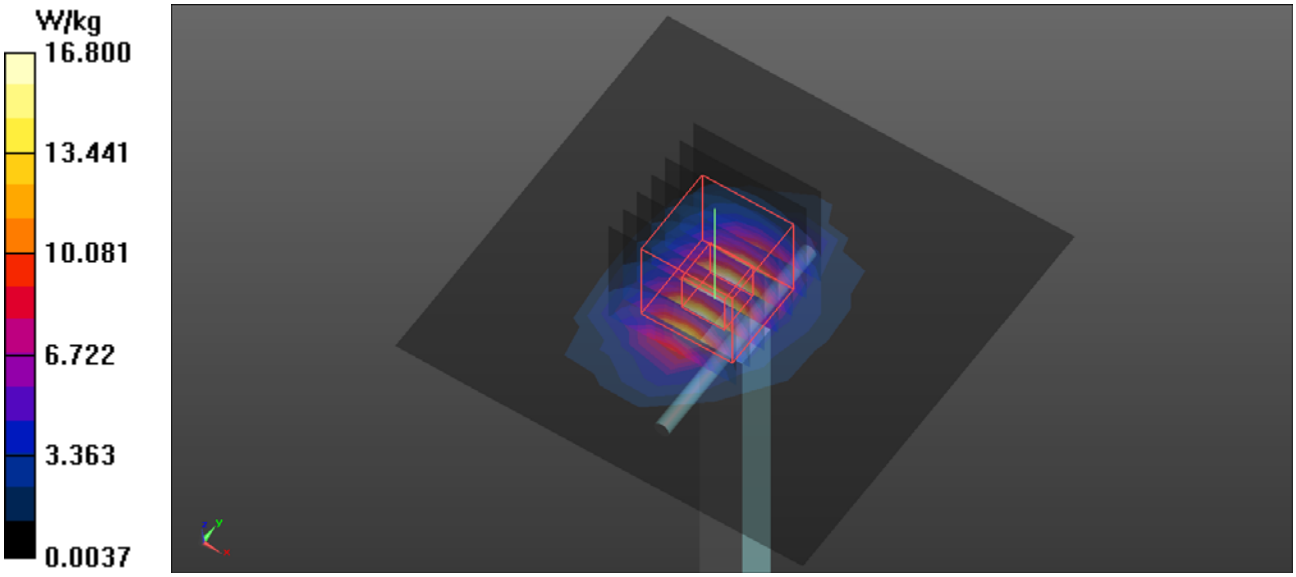

Test Laboratory: BTL Inc. Date: 8/1/2017

System Check_B5200

DUT: Dipole D5GHzV2;

Communication System: UID 0, CW (0); Frequency: 5200 MHz; Duty Cycle: 1:1
Medium parameters used: f = 5200 MHz; σ = 5.347 S/m; ε_r = 47.666; ρ = 1000 kg/m^3
Ambient Temperature：22.4 ℃; Liquid Temperature：22.3 ℃

DASY Configuration:

- Probe: EX3DV4 - SN7369; ConvF(4.68, 4.68, 4.68); Calibrated: 8/31/2016;
- Sensor-Surface: 2mm (Mechanical Surface Detection), z = 1.0, 23.0
- Electronics: DAE4 Sn1486; Calibrated: 8/23/2016
- Phantom: ELI V5.0 (20deg probe tilt); Type: QD OVA 002 AA; Serial: 1240
- DASY52 52.8.8(1258); SEMCAD X 14.6.10(7373)

Area Scan (10x10x1): Measurement grid: dx=10mm, dy=10mm
Maximum value of SAR (measured) = 11.2 W/kg

Zoom Scan (7x7x12)/Cube 0: Measurement grid: dx=4mm, dy=4mm, dz=2mm
Reference Value = 56.58 V/m; Power Drift = -0.01 dB
Peak SAR (extrapolated) = 29.2 W/kg
SAR(1 g) = 7.65 W/kg; SAR(10 g) = 2.17 W/kg
Maximum value of SAR (measured) = 15.8 W/kg

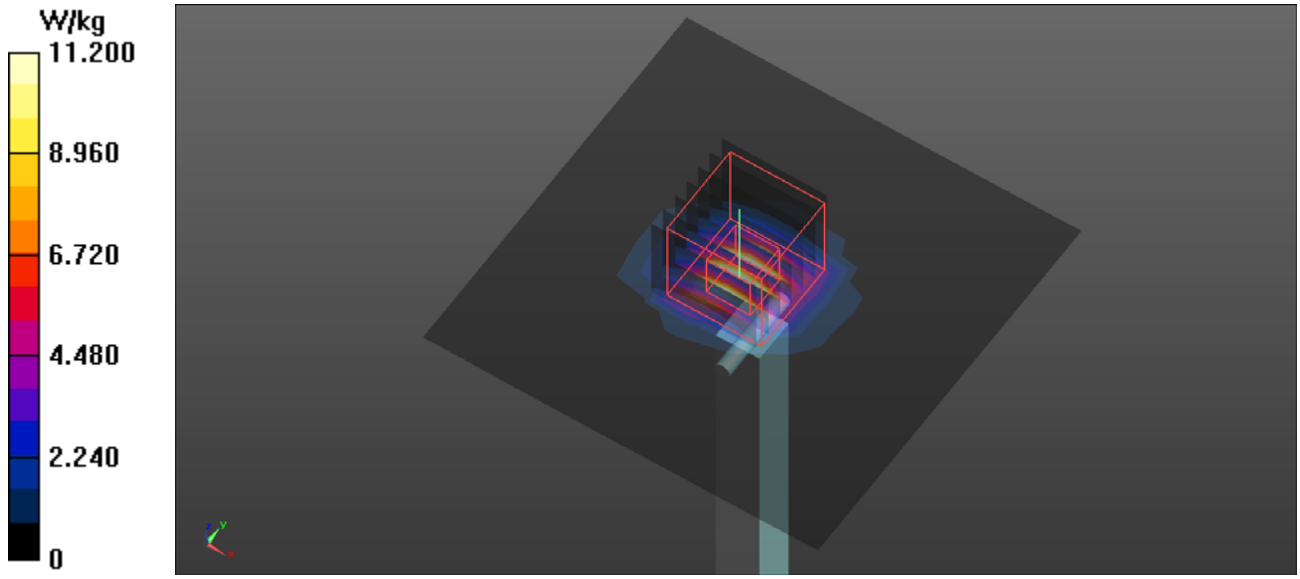

Test Laboratory: BTL Inc. Date: 8/12/2017

System Check_B5200

DUT: Dipole D5GHzV2;

Communication System: UID 0, CW (0); Frequency: 5250 MHz; Duty Cycle: 1:1
Medium parameters used: f = 5250 MHz; σ = 5.208 S/m; ε_r = 50.972; ρ = 1000 kg/m^3
Ambient Temperature：22.5 ℃; Liquid Temperature：22.4 ℃

DASY Configuration:

- Probe: EX3DV4 - SN3753; ConvF(4.87, 4.87, 4.87); Calibrated: 5/5/2017;
- Sensor-Surface: 2mm (Mechanical Surface Detection), z = 1.0, 12.0
- Electronics: DAE4 Sn1305; Calibrated: 4/25/2017
- Phantom: ELI V5.0 (20deg probe tilt); Type: QD OVA 002 AA; Serial: 1240
- DASY52 52.8.8(1258); SEMCAD X 14.6.10(7373)

Area Scan (10x10x1): Measurement grid: dx=10mm, dy=10mm
Maximum value of SAR (measured) = 9.17 W/kg

Zoom Scan (7x7x12)/Cube 0: Measurement grid: dx=4mm, dy=4mm, dz=2mm
Reference Value = 57.88 V/m; Power Drift = 0.03 dB
Peak SAR (extrapolated) = 28.7 W/kg
SAR(1 g) = 7.13 W/kg; SAR(10 g) = 2.03 W/kg
Maximum value of SAR (measured) = 14.9 W/kg

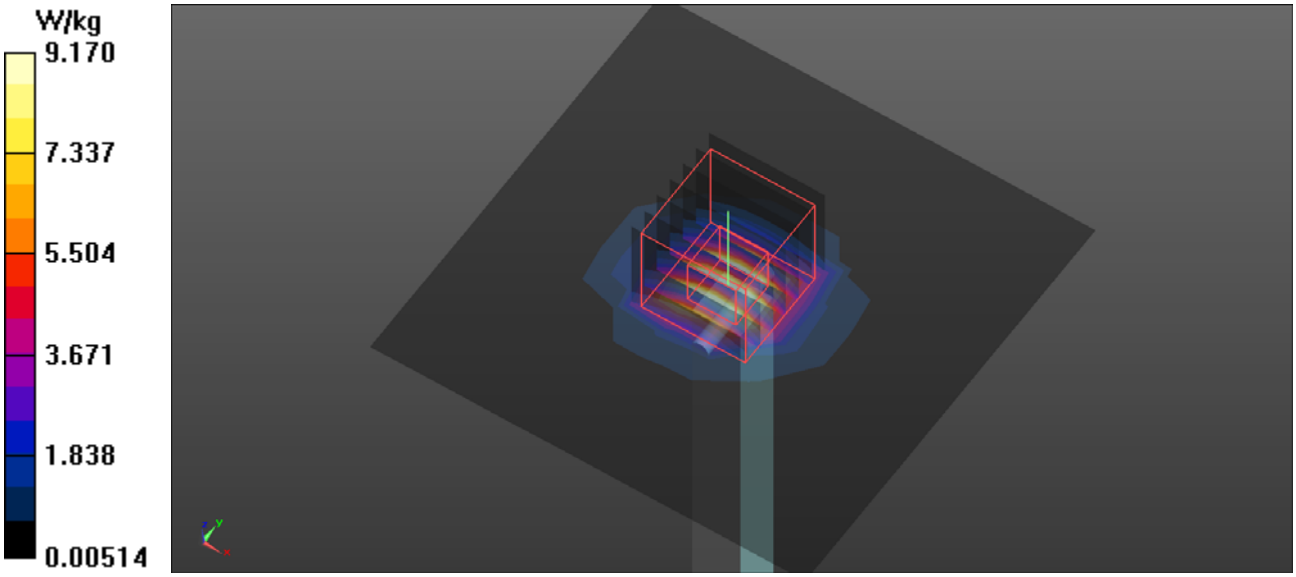

Test Laboratory: BTL Inc. Date: 22/8/2017

System Check_B5200_170822

DUT: Dipole 5 GHz; Type: D5GHzV2; SN: 1221;

Communication System: UID 0, CW; Frequency: 5200 MHz; Duty Cycle: 1:1
Medium parameters used: f = 5200 MHz; σ = 5.159 S/m; ε_r = 51.05; ρ = 1000 kg/m^3
Ambient Temperature：23.3 ℃; Liquid Temperature：22.5 ℃

DASY Configuration:

- Probe: EX3DV4 - SN3753; ConvF(4.87, 4.87, 4.87); Calibrated: 5/5/2017;
- Sensor-Surface: 2mm (Mechanical Surface Detection), z = 1.0, 23.0
- Electronics: DAE4 Sn1305; Calibrated: 4/25/2017
- Phantom: ELI V5.0 (20deg probe tilt); Type: QD OVA 002 AA; Serial: 1240
- DASY52 52.8.8(1258); SEMCAD X 14.6.10(7373)

Area Scan (10x10x1): Measurement grid: dx=10mm, dy=10mm
Maximum value of SAR (measured) = 11.1 W/kg

Zoom Scan (7x7x12)/Cube 0: Measurement grid: dx=4mm, dy=4mm, dz=2mm
Reference Value = 57.92 V/m; Power Drift = 0.09 dB
Peak SAR (extrapolated) = 27.5 W/kg
SAR(1 g) = 7.44 W/kg; SAR(10 g) = 2.12 W/kg
Maximum value of SAR (measured) = 15.4 W/kg

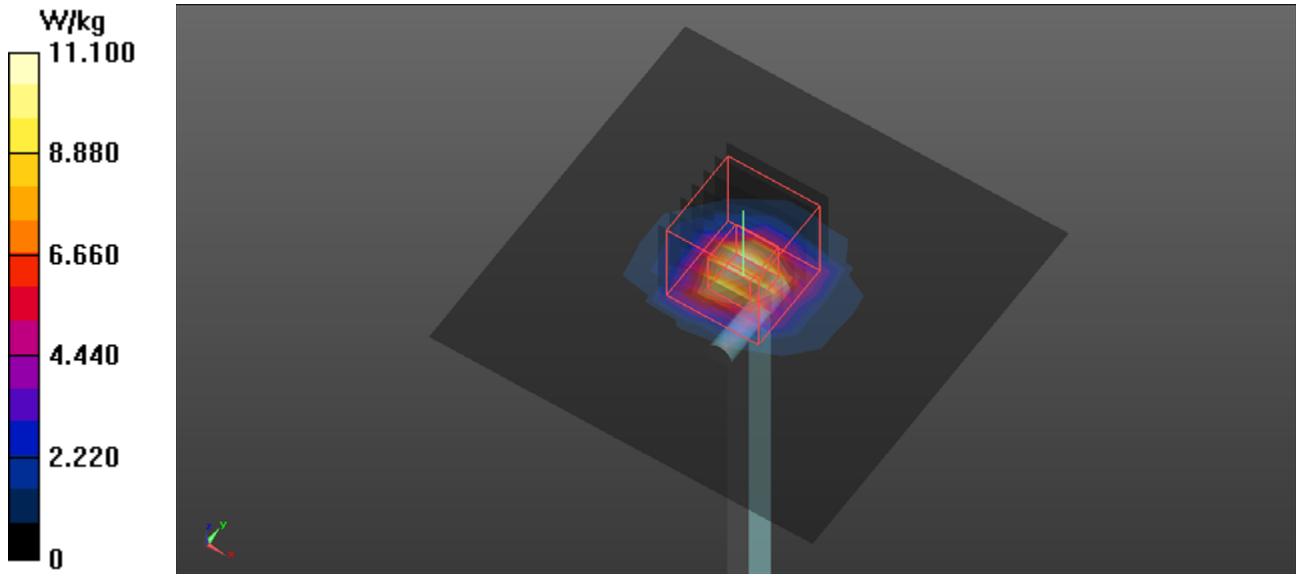

Test Laboratory: BTL Inc. Date: 8/3/2017

System Check_B5300

DUT: Dipole D5GHzV2;

Communication System: UID 0, CW (0); Frequency: 5300 MHz; Duty Cycle: 1:1
Medium parameters used: f = 5300 MHz; σ = 5.507 S/m; ε_r = 47.625; ρ = 1000 kg/m^3
Ambient Temperature：22.4 ℃; Liquid Temperature：22.2 ℃

DASY Configuration:

- Probe: EX3DV4 - SN7369; ConvF(4.51, 4.51, 4.51); Calibrated: 8/31/2016;
- Sensor-Surface: 2mm (Mechanical Surface Detection), z = 1.0, 23.0
- Electronics: DAE4 Sn1486; Calibrated: 8/23/2016
- Phantom: ELI V5.0 (20deg probe tilt); Type: QD OVA 002 AA; Serial: 1240
- DASY52 52.8.8(1258); SEMCAD X 14.6.10(7373)

Area Scan (10x10x1): Measurement grid: dx=10mm, dy=10mm
Maximum value of SAR (measured) = 10.8 W/kg

Zoom Scan (7x7x12)/Cube 0: Measurement grid: dx=4mm, dy=4mm, dz=2mm
Reference Value = 56.85 V/m; Power Drift = 0.08 dB
Peak SAR (extrapolated) = 29.5 W/kg
SAR(1 g) = 7.36 W/kg; SAR(10 g) = 2.06 W/kg
Maximum value of SAR (measured) = 15.4 W/kg

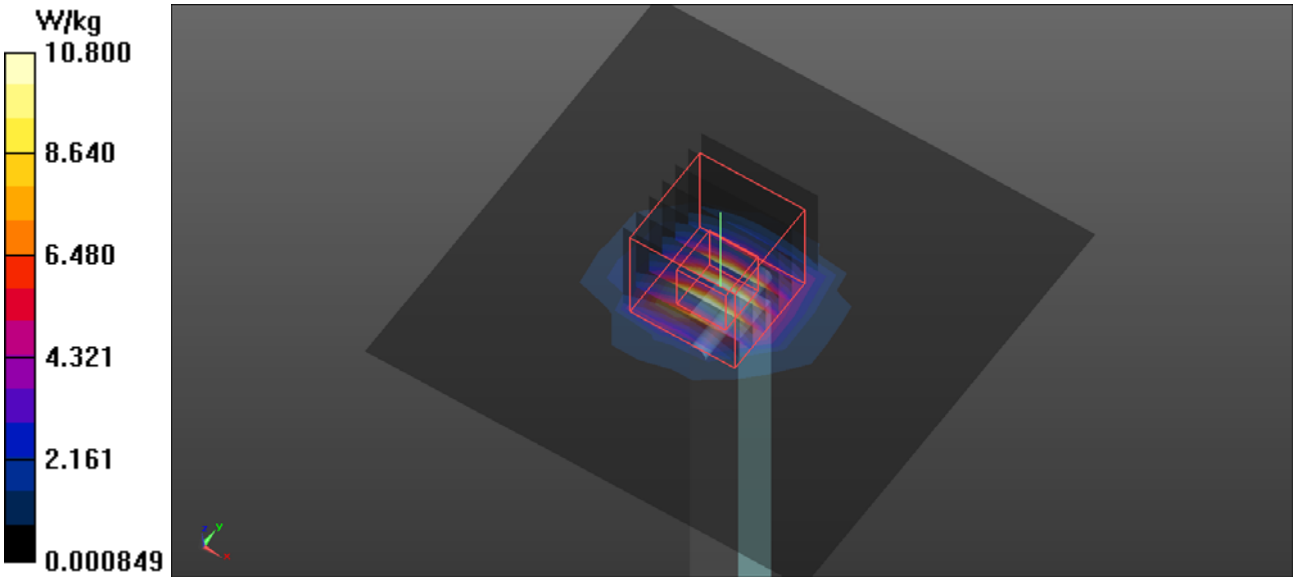

Test Laboratory: BTL Inc. Date: 12/8/2017

System Check_B5300_170812

DUT: Dipole 5 GHz; Type: D5GHzV2; ;

Communication System: UID 0, CW (0); Frequency: 5300 MHz; Duty Cycle: 1:1
Medium parameters used: f = 5300 MHz; σ = 5.413 S/m; ε_r = 48.764; ρ = 1000 kg/m^3
Ambient Temperature：23.2 ℃; Liquid Temperature：22.5 ℃

DASY Configuration:

- Probe: EX3DV4 - SN3753; ConvF(4.87, 4.87, 4.87); Calibrated: 5/5/2017;
- Sensor-Surface: 2mm (Mechanical Surface Detection), z = 1.0, 23.0
- Electronics: DAE4 Sn1305; Calibrated: 4/25/2017
- Phantom: ELI V5.0 (20deg probe tilt); Type: QD OVA 002 AA; Serial: 1240
- DASY52 52.8.8(1258); SEMCAD X 14.6.10(7373)

Area Scan (10x10x1): Measurement grid: dx=10mm, dy=10mm
Maximum value of SAR (measured) = 10.9 W/kg

Zoom Scan (7x7x12)/Cube 0: Measurement grid: dx=4mm, dy=4mm, dz=2mm
Reference Value = 56.77 V/m; Power Drift = 0.07 dB
Peak SAR (extrapolated) = 29.4 W/kg
SAR(1 g) = 7.49 W/kg; SAR(10 g) = 2.11 W/kg
Maximum value of SAR (measured) = 15.6 W/kg

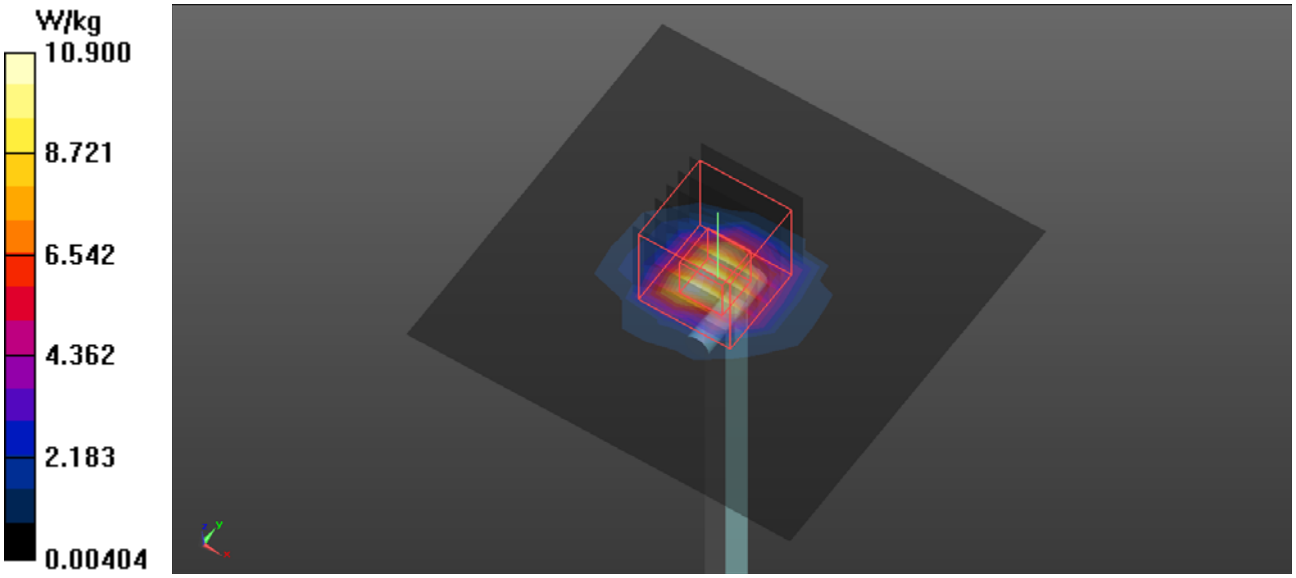

Test Laboratory: BTL Inc. Date: 22/8/2017

System Check_B5300_170822

DUT: Dipole 5 GHz; Type: D5GHzV2; ;

Communication System: UID 0, CW (0); Frequency: 5300 MHz; Duty Cycle: 1:1
Medium parameters used: f = 5300 MHz; σ = 5.316 S/m; ε_r = 50.949; ρ = 1000 kg/m^3
Ambient Temperature：23.3 ℃; Liquid Temperature：22.5 ℃

DASY Configuration:

- Probe: EX3DV4 - SN3753; ConvF(4.87, 4.87, 4.87); Calibrated: 5/5/2017;
- Sensor-Surface: 2mm (Mechanical Surface Detection), z = 1.0, 23.0
- Electronics: DAE4 Sn1305; Calibrated: 4/25/2017
- Phantom: ELI V5.0 (20deg probe tilt); Type: QD OVA 002 AA; Serial: 1240
- DASY52 52.8.8(1258); SEMCAD X 14.6.10(7373)

Area Scan (10x10x1): Measurement grid: dx=10mm, dy=10mm
Maximum value of SAR (measured) = 11.8 W/kg

Zoom Scan (7x7x12)/Cube 0: Measurement grid: dx=4mm, dy=4mm, dz=2mm
Reference Value = 58.40 V/m; Power Drift = 0.09 dB
Peak SAR (extrapolated) = 29.4 W/kg
SAR(1 g) = 7.85 W/kg; SAR(10 g) = 2.24 W/kg
Maximum value of SAR (measured) = 16.2 W/kg

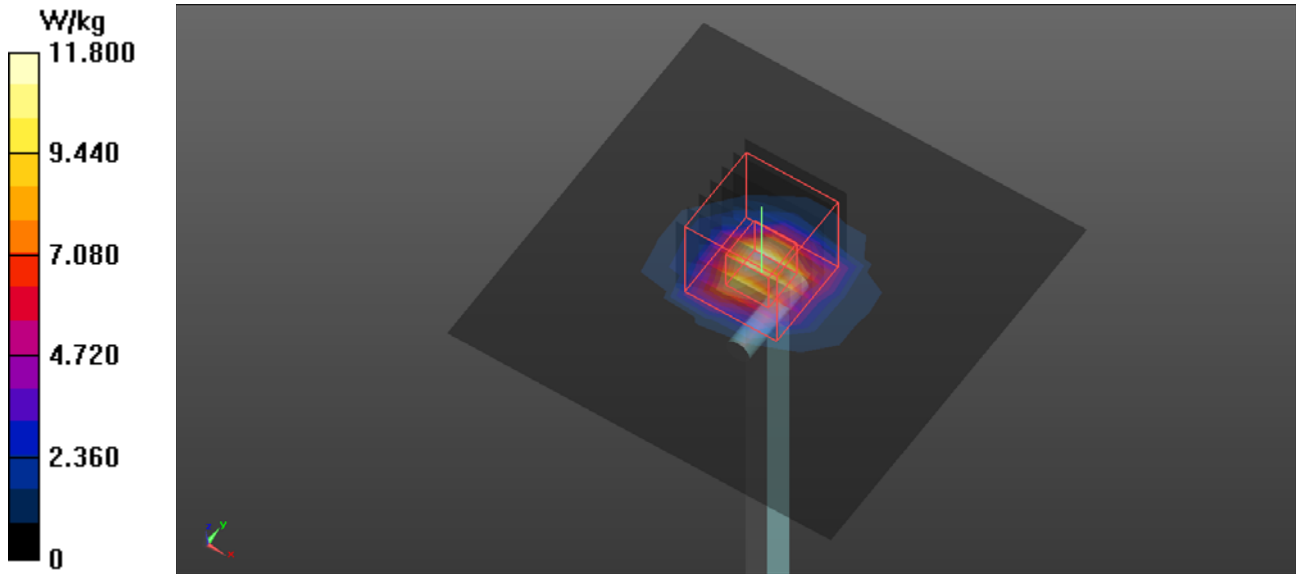

Test Laboratory: BTL Inc. Date: 8/4/2017

System Check_B5600

DUT: Dipole D5GHzV2;

Communication System: UID 0, CW (0); Frequency: 5600 MHz; Duty Cycle: 1:1
Medium parameters used: f = 5600 MHz; σ = 5.894 S/m; ε_r = 46.817; ρ = 1000 kg/m^3
Ambient Temperature：22.4 ℃; Liquid Temperature：22.3 ℃

DASY Configuration:

- Probe: EX3DV4 - SN7369; ConvF(3.79, 3.79, 3.79); Calibrated: 8/31/2016;
- Sensor-Surface: 2mm (Mechanical Surface Detection), z = 1.0, 23.0
- Electronics: DAE4 Sn1486; Calibrated: 8/23/2016
- Phantom: ELI V5.0 (20deg probe tilt); Type: QD OVA 002 AA; Serial: 1240
- DASY52 52.8.8(1258); SEMCAD X 14.6.10(7373)

Area Scan (10x10x1): Measurement grid: dx=10mm, dy=10mm
Maximum value of SAR (measured) = 12.0 W/kg

Zoom Scan (7x7x12)/Cube 0: Measurement grid: dx=4mm, dy=4mm, dz=2mm
Reference Value = 57.32 V/m; Power Drift = 0.08 dB
Peak SAR (extrapolated) = 33.1 W/kg
SAR(1 g) = 7.83 W/kg; SAR(10 g) = 2.22 W/kg
Maximum value of SAR (measured) = 16.4 W/kg

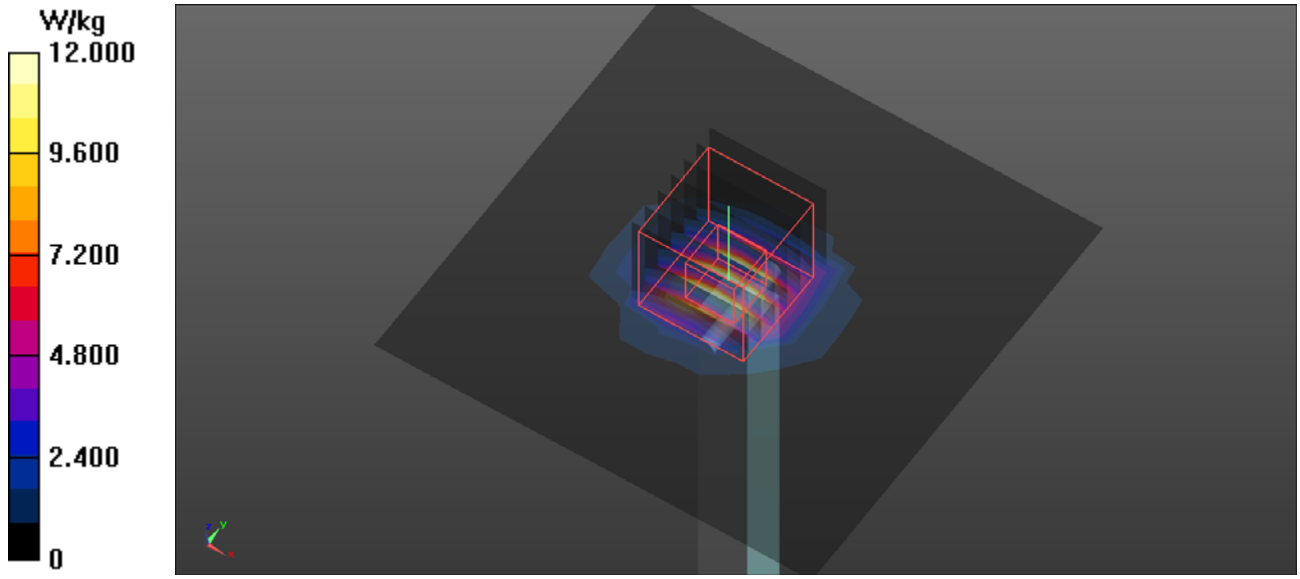

Test Laboratory: BTL Inc. Date: 8/14/2017

System Check_B5600

DUT: Dipole D5GHzV2;

Communication System: UID 0, CW (0); Frequency: 5600 MHz; Duty Cycle: 1:1
Medium parameters used: f = 5600 MHz; σ = 5.884 S/m; ε_r = 50.283; ρ = 1000 kg/m^3
Ambient Temperature：22.5 ℃; Liquid Temperature：22.4 ℃

DASY Configuration:

- Probe: EX3DV4 - SN3753; ConvF(4.27, 4.27, 4.27); Calibrated: 5/5/2017;
- Sensor-Surface: 2mm (Mechanical Surface Detection), z = 1.0, 23.0
- Electronics: DAE4 Sn1305; Calibrated: 4/25/2017
- Phantom: ELI V5.0 (20deg probe tilt); Type: QD OVA 002 AA; Serial: 1240
- DASY52 52.8.8(1258); SEMCAD X 14.6.10(7373)

Area Scan (10x10x1): Measurement grid: dx=10mm, dy=10mm
Maximum value of SAR (measured) = 11.8 W/kg

Zoom Scan (7x7x12)/Cube 0: Measurement grid: dx=4mm, dy=4mm, dz=2mm
Reference Value = 59.15 V/m; Power Drift = 0.09 dB
Peak SAR (extrapolated) = 31.5 W/kg
SAR(1 g) = 8.16 W/kg; SAR(10 g) = 2.32 W/kg
Maximum value of SAR (measured) = 17.3 W/kg

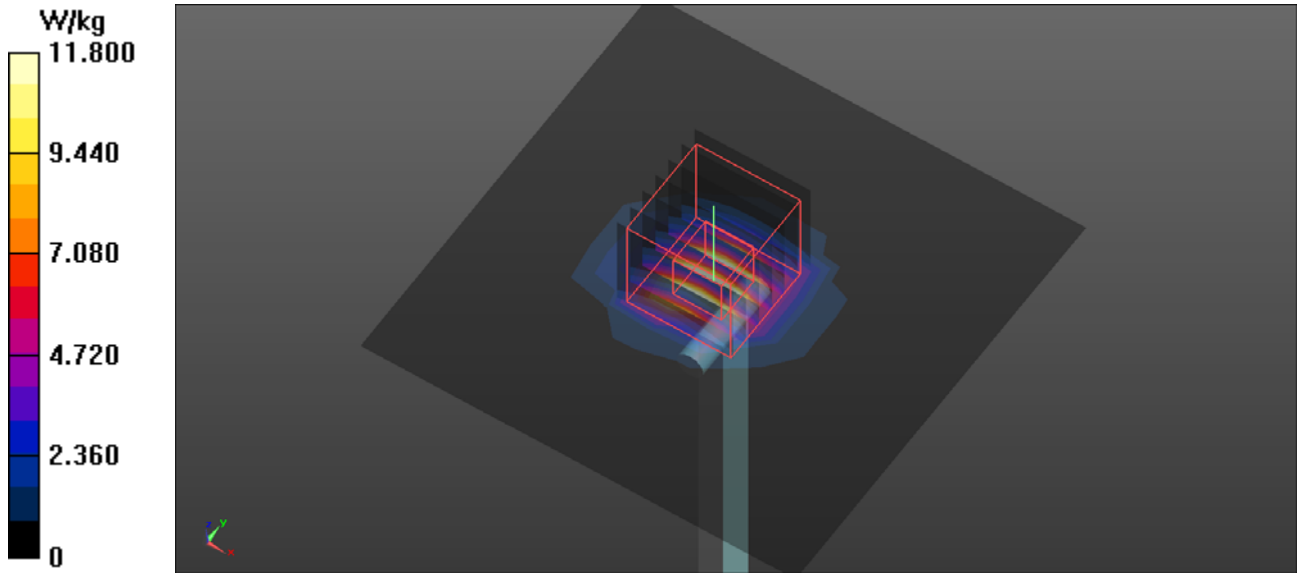

Test Laboratory: BTL Inc. Date: 8/2/2017

System Check_B5800

DUT: Dipole D5GHzV2;

Communication System: UID 0, CW (0); Frequency: 5800 MHz; Duty Cycle: 1:1
Medium parameters used: f = 5800 MHz; σ = 6.172 S/m; ε_r = 46.486; ρ = 1000 kg/m^3
Ambient Temperature：22.5 ℃; Liquid Temperature：22.3 ℃

DASY Configuration:

- Probe: EX3DV4 - SN7369; ConvF(4, 4, 4); Calibrated: 8/31/2016;
- Sensor-Surface: 2mm (Mechanical Surface Detection), z = 1.0, 12.0
- Electronics: DAE4 Sn1486; Calibrated: 8/23/2016
- Phantom: ELI V5.0 (20deg probe tilt); Type: QD OVA 002 AA; Serial: 1240
- DASY52 52.8.8(1258); SEMCAD X 14.6.10(7373)

Area Scan (10x10x1): Measurement grid: dx=10mm, dy=10mm
Maximum value of SAR (measured) = 13.1 W/kg

Zoom Scan (7x7x12)/Cube 0: Measurement grid: dx=4mm, dy=4mm, dz=2mm
Reference Value = 55.92 V/m; Power Drift = -0.00 dB
Peak SAR (extrapolated) = 30.6 W/kg
SAR(1 g) = 7.5 W/kg; SAR(10 g) = 2.13 W/kg
Maximum value of SAR (measured) = 16.2 W/kg

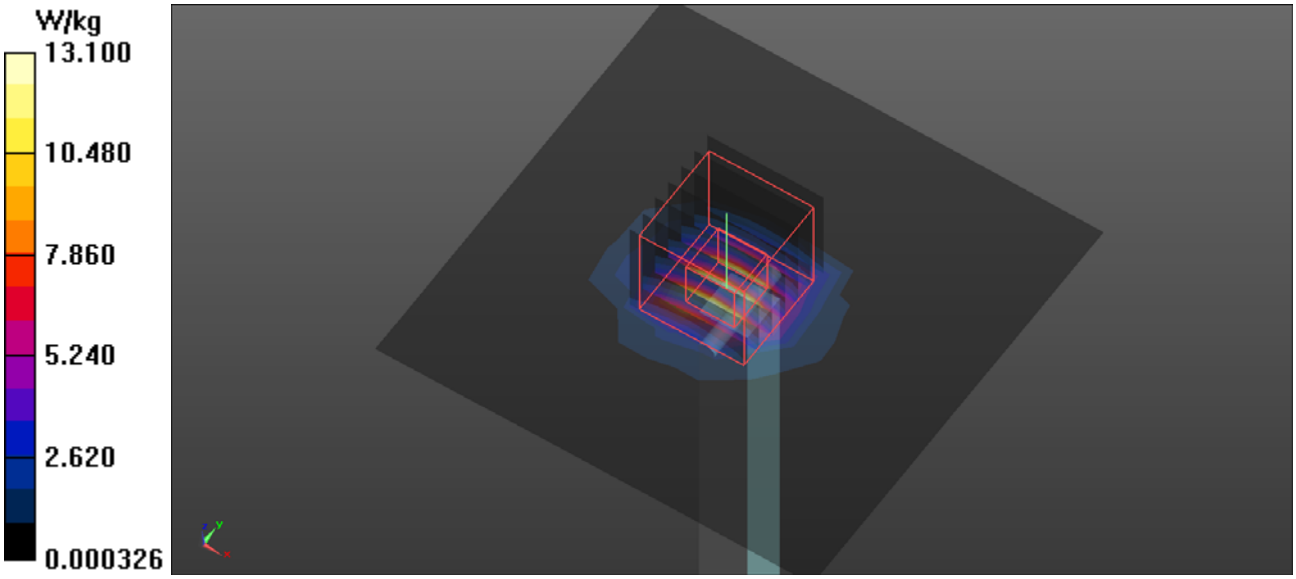

Test Laboratory: BTL Inc. Date: 8/14/2017

System Check_B5800

DUT: Dipole D5GHzV2;

Communication System: UID 0, CW (0); Frequency: 5800 MHz; Duty Cycle: 1:1
Medium parameters used: f = 5800 MHz; σ = 6.185 S/m; ε_r = 49.782; ρ = 1000 kg/m^3
Ambient Temperature：22.5 ℃; Liquid Temperature：22.4 ℃

DASY Configuration:

- Probe: EX3DV4 - SN3753; ConvF(4.52, 4.52, 4.52); Calibrated: 5/5/2017;
- Sensor-Surface: 2mm (Mechanical Surface Detection), z = 1.0, 23.0
- Electronics: DAE4 Sn1305; Calibrated: 4/25/2017
- Phantom: ELI V5.0 (20deg probe tilt); Type: QD OVA 002 AA; Serial: 1240
- DASY52 52.8.8(1258); SEMCAD X 14.6.10(7373)

Area Scan (10x10x1): Measurement grid: dx=10mm, dy=10mm
Maximum value of SAR (measured) = 11.7 W/kg
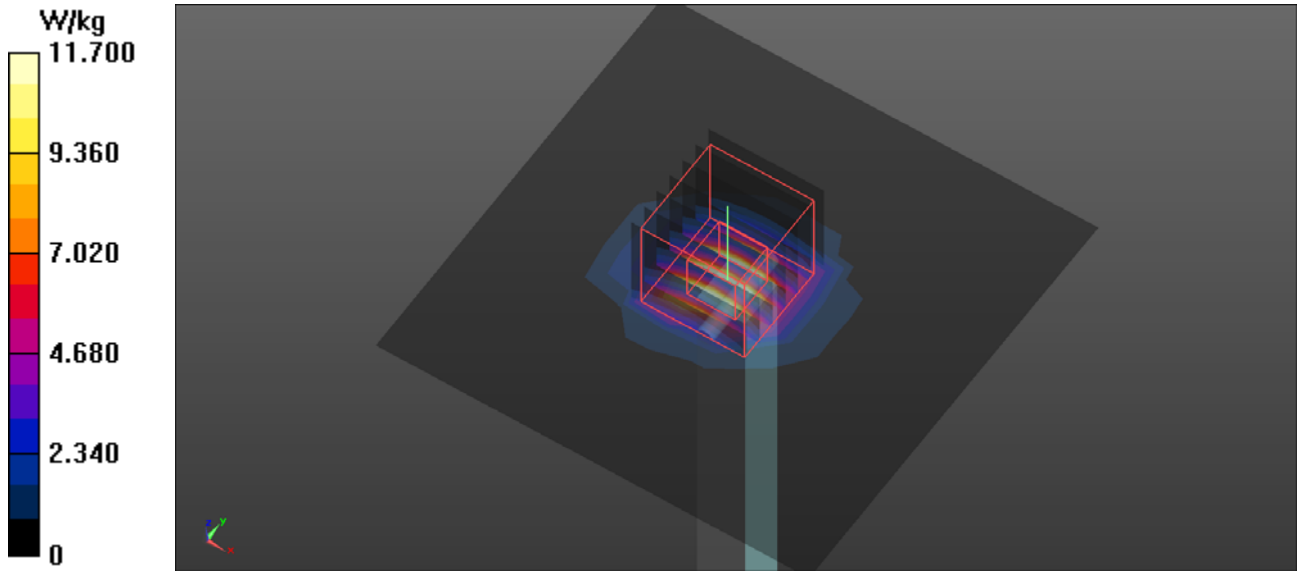
Zoom Scan (7x7x12)/Cube 0: Measurement grid: dx=4mm, dy=4mm, dz=2mm
Reference Value = 57.08 V/m; Power Drift = 0.10 dB
Peak SAR (extrapolated) = 32.8 W/kg
SAR(1 g) = 7.97 W/kg; SAR(10 g) = 2.26 W/kg
Maximum value of SAR (measured) = 17.2 W/kg