# VARIANT FCC TEST REPORT (BLUETOOTH)

**REPORT NO.:** RF130729C17A

**MODEL NO.:** TX201L

**FCC ID:** MSQ-TX201L

**RECEIVED:** Oct. 22, 2013

**TESTED:** Nov. 05, 2013 ~ Nov. 06, 2013

**ISSUED:** Nov. 14, 2013

**APPLICANT:** ASUSTek COMPUTER INC.

**ADDRESS:** 4F., No. 150, LI-TE Rd., PEITOU, TAIPEI 112, TAIWAN

**ISSUED BY:** Bureau Veritas Consumer Products Services (H.K.) Ltd., Taoyuan Branch

**LAB ADDRESS:** No. 47, 14th Ling, Chia Pau Vil., Lin Kou Dist., New Taipei City, Taiwan ( R.O.C )

**TEST LOCATION:** No. 19, Hwa Ya 2nd Rd, Wen Hwa Tsuen, Kwei Shan Hsiang, Taoyuan Hsien 333, Taiwan, R.O.C.

This report should not be used by the client to claim product certification, approval, or endorsement by TAF or any government agencies.

This report is for your exclusive use. Any copying or replication of this report to or for any other person or entity, or use of our name or trademark, is permitted only with our prior written permission. This report sets forth our findings solely with respect to the test samples identified herein. The results set forth in this report are not indicative or representative of the quality or characteristics of the lot from which a test sample was taken or any similar or identical product unless specifically and expressly noted. Our report includes all of the tests requested by you and the results thereof based upon the information that you provided to us. You have 60 days from date of issuance of this report to notify us of any material error or omission caused by our negligence, provided, however, that such notice shall be in writing and shall specifically address the issue you wish to raise. A failure to raise such issue within the prescribed time shall constitute your unqualified acceptance of the completeness of this report, the tests conducted and the correctness of the report contents. Unless specific mention, the uncertainty of measurement has been explicitly taken into account to declare the compliance or non-compliance to the specification

# Table of Contents

RELEASE CONTROL RECORD ..... 3
1. CERTIFICATION ..... 4
2. SUMMARY OF TEST RESULTS ..... 5
2.1 MEASUREMENT UNCERTAINTY ..... 5
3. GENERAL INFORMATION ..... 6
3.1 GENERAL DESCRIPTION OF EUT ..... 6
3.2 DESCRIPTION OF TEST MODES ..... 9
3.2.1 TEST MODE APPLICABILITY AND TESTED CHANNEL DETAIL ..... 10
3.3 GENERAL DESCRIPTION OF APPLIED STANDARDS ..... 11
3.4 DESCRIPTION OF SUPPORT UNITS ..... 11
3.4.1 CONFIGURATION OF SYSTEM UNDER TEST ..... 11
4. TEST TYPES AND RESULTS (FOR Bluetooth EDR) ..... 12
4.1 Radiated Emission AND BANDEDGE Measurement ..... 12
4.1.1 LIMITS OF RADIATED EMISSION AND BANDEDGE MEASUREMENT ..... 12
4.1.2 TEST INSTRUMENTS ..... 13
4.1.3 TEST PROCEDURES ..... 14
4.1.4 DEVIATION FROM TEST STANDARD ..... 14
4.1.5 TEST SETUP ..... 15
4.1.6 EUT OPERATING CONDITIONS ..... 15
4.1.7 TEST RESULTS ..... 16
5. PHOTOGRAPHS OF THE TEST CONFIGURATION ..... 18
6. INFORMATION ON THE TESTING LABORATORIES ..... 19
7. APPENDIX A - MODIFICATIONS RECORDERS FOR ENGINEERING CHANGES TO THE EUT BY THE LAB ..... 20

# RELEASE CONTROL RECORD

| ISSUE NO. | REASON FOR CHANGE | DATE ISSUED |
|---|---|---|
| RF130729C17A | Original release | Nov. 14, 2013 |

# 1. CERTIFICATION

| | |
|---|---|
| **PRODUCT:** | Notebook PC |
| **MODEL NO.:** | TX201L |
| **BRAND:** | ASUS |
| **APPLICANT:** | ASUSTek COMPUTER INC. |
| **TESTED:** | Nov. 05, 2013 ~ Nov. 06, 2013 |
| **TEST SAMPLE:** | Production Unit |
| **STANDARDS:** | **FCC Part 15, Subpart C (Section 15.247)** |
| | ANSI C63.10-2009 |

This report is issued as a supplementary report to BV ADT report no.: RF130729C17. This report shall be used by combining with its original report.

**PREPARED BY** : Vera Huang **, DATE :** Nov. 14, 2013

Vera Huang / Specialist

**APPROVED BY** : Sam chen **, DATE :** Nov. 14, 2013

Sam Chen / Assistant Manager

# 2. SUMMARY OF TEST RESULTS

The EUT has been tested according to the following specifications:

| APPLIED STANDARD: FCC Part 15, Subpart C (Bluetooth EDR) | | | |
|---|---|---|---|
| **STANDARD SECTION** | **TEST TYPE AND LIMIT** | **RESULT** | **REMARK** |
| 15.207 | AC Power Conducted Emission | NA | Refer to NOTE |
| 15.247(a)(1) (iii) | Number of Hopping Frequency Used | NA | Refer to NOTE |
| 15.247(a)(1) (iii) | Dwell Time on Each Channel | NA | Refer to NOTE |
| 15.247(a)(1) | 1. Hopping Channel Separation<br>2. Spectrum Bandwidth of a Frequency Hopping Sequence Spread Spectrum System | NA | Refer to NOTE |
| 15.247(b) | Maximum Peak Output Power | NA | Refer to NOTE |
| 15.247(d) | Transmitter Radiated Emissions | PASS | Meet the requirement of limit. Minimum passing margin is -10.57dB at 37.61MHz. |
| 15.247(d) | Band Edge Measurement | NA | Refer to NOTE |
| 15.203 | Antenna Requirement | NA | Refer to NOTE |

**NOTE:** Only radiated emission was performed for this addendum. Refer to original report for other test data.

## 2.1 MEASUREMENT UNCERTAINTY

Where relevant, the following measurement uncertainty levels have been estimated for tests performed on the EUT as specified in CISPR 16-4-2:

| MEASUREMENT | FREQUENCY | UNCERTAINTY |
|---|---|---|
| Radiated emissions | 30MHz ~ 200MHz | 2.93 dB |
| | 200MHz ~1000MHz | 2.95 dB |
| | 1GHz ~ 18GHz | 2.26 dB |
| | 18GHz ~ 40GHz | 1.94 dB |

This uncertainty represents an expanded uncertainty expressed at approximately the 95% confidence level using a coverage factor of k=2.

# 3. GENERAL INFORMATION

## 3.1 GENERAL DESCRIPTION OF EUT

**<Pad>**

| | |
|---|---|
| **EUT** | Notebook PC |
| **MODEL NO.** | TX201L |
| **POWER SUPPLY** | 5Vdc (adapter or host equipment)<br>3.75Vdc (battery) |
| **MODULATION TYPE** | GFSK, $\pi$/4-DQPSK, 8DPSK |
| **TRANSFER RATE** | 1/2/3Mbps |
| **OPERATING FREQUENCY** | 2402 ~ 2480MHz |
| **NUMBER OF CHANNEL** | 79 |
| **CHANNEL SPACING** | 1MHz |
| **ANTENNA TYPE** | PIFA antenna with -2.71dBi gain |
| **ANTENNA CONNECTOR** | NA |
| **DATA CABLE** | Refer to Note as below |
| **I/O PORTS** | Refer to user's manual |
| **ACCESSORY DEVICES** | Refer to Note as below |

**<Base>**

| | | |
|---|---|---|
| **POWER SUPPLY** | 19Vdc (adapter)<br>7.54Vdc (battery) | |
| **MODULATION TYPE** | **Bluetooth EDR** | GFSK, $\pi$/4-DQPSK, 8DPSK |
| | **Bluetooth LE 4.0** | GFSK |
| **TRANSFER RATE** | **Bluetooth EDR** | 1/2/3Mbps |
| | **Bluetooth LE 4.0** | 1Mbps |
| **OPERATING FREQUENCY** | 2402 ~ 2480MHz | |
| **NUMBER OF CHANNEL** | **Bluetooth EDR** | 79 |
| | **Bluetooth LE 4.0** | 40 |
| **CHANNEL SPACING** | **Bluetooth EDR** | 1MHz |
| | **Bluetooth LE 4.0** | 2MHz |
| **ANTENNA TYPE** | PIFA antenna with -1.93dBi gain | |
| **ANTENNA CONNECTOR** | NA | |
| **DATA CABLE** | Refer to Note as below | |
| **I/O PORTS** | Refer to user's manual | |
| **ACCESSORY DEVICES** | Refer to Note as below | |

**NOTE:**

1. This report is issued as a supplementary report to BV ADT report no.: RF130729C17. The difference compared with original report is adding 2.4GHz/5GHz RF diplexer for pad. Therefore, only radiated emission for pad had been performed and presented in the report.
2. The EUT has following accessories.

**<For Pad>**

| ITEM | BRAND | MODEL | DESCRIPTION |
|---|---|---|---|
| AC Adapter 1 | ASUS | AD83531 | I/P: 100-240Vac, 50-60Hz, 0.3A<br>O/P: 5Vdc, 2A |
| AC Adapter 2 | ASUS | AD835M1 | I/P: 100-240Vac, 50-60Hz, 0.3A<br>O/P: 5Vdc, 2A |
| Li-ion Battery | Dynapack International Technology Corp/ Trademark for ASUS | C11N1312 | Rating: 3.75Vdc, 19Wh |
| USB cable | ASUS | N/A | 0.9m shielded cable w/o ferrite core |
| Photo Camera | LITEON | 13P2BA515 | -- |
| Video Camera | CHICONY | CNFDH3021003870LH | -- |
| WLAN/BT Module | Broadcom | BCM43340 | -- |
| CPU | Intel | Z2560 | 760 Pin |
| Main Borad | ASUS | TX201LA PAD MAIN BOARD | -- |
| LCD Panel 1 | INNOLUX | N116HSE | -- |
| LCD Panel 2 | BOE | HN116WX1 | -- |
| Flash Memory 1 | HYNIX | H9TKNNNBPDARAR-NGM | Co-POP LPDDR2 Memory 2G<br>Support Dual 32-bit channels.<br>6.4GB/s @ 800MHz,<br>8.2GB/s @ 1066MHz. |
| Flash Memory 2 | ELPIDA | EDB8164B3PD-1D-F | Co-POP LPDDR2 Memory 1G<br>Support Dual 32-bit channels.<br>6.4GB/s @ 800MHz,<br>8.2GB/s @ 1066MHz. |
| eMMC 1 | HYNIX | H26M64003DQR | eMMC 32G |
| eMMC 2 | SANDISK | SDIN8DE4-32G | eMMC 16G |

* Adapter 1 and adapter 2 have same design, material, and specification. The difference between them is adapter 2 could change plug type.

**<For Base>**

| ITEM | BRAND | MODEL | DESCRIPTION |
|---|---|---|---|
| AC Adapter | ASUS | AD883J20 | I/P: 100-240Vac, 50-60Hz, 1A<br>O/P: 19Vdc, 2.37A<br>2.2m shielded cable w/o ferrite core |
| Li-ion Battery | Dynapack International Technology Corp/<br>Trademark for ASUS | C21N1313 | Rating: 7.54Vdc, 33Wh |
| WLAN/BT Module | AZWAVE | AW-CB161H | -- |
| USB to RJ45 Cable | ASUS | USB Ethernet cable | 0.18m shielded cable w/o ferrite core<br>Support 10Mbps and 100Mbps |
| MDP to VGA Cable | ASUS | N/A | 0.12m shielded cable w/o ferrite core |
| CPU 1 | Intel | i5-4200U | 1168 Pin, 1.8GHz |
| CPU 2 | Intel | i74500u | 1168 Pin, 1.6GHz |
| Main Borad | ASUS | TX201LA BASE BOARD | -- |
| Flash Memory 1 | HYNIX | H5TC4G63AFR-PBA | Onboard 4G (256 x 16 x8),<br>8G (512 x 16 x 8) 1600MHz DDR3L SDRAM |
| Flash Memory 2 | ELPIDA | EDJ4216EFBG-GNL-F | Onboard 4G (256 x 16 x8),<br>8G (512 x 16 x 8) 1600MHz DDR3L SDRAM |
| HDD 1 | HGST | HTS545050A7E680 | 7mm HDD 320G/500G/750G 5400RPM |
| HDD 2 | Seagate | ST500LT012 | 7mm HDD 320G/500G/750G 5400RPM |

3. The configurations of the device are as below.

   SKU 1 Pad: LCD Panel 1 + Flash Memory 1 + eMMC 1

   SKU 2 Pad: LCD Panel 2 + Flash Memory 2 + eMMC 2

   SKU 1 Base: CPU 1 + Flash Memory 1 + HDD 1

   SKU 2 Base: CPU 2 + Flash Memory 2 + HDD 2

4. The above EUT information is declared by the manufacturer and for more detailed features description, please refer to the manufacturer's specifications or User's Manual.

## 3.2 DESCRIPTION OF TEST MODES

### For Bluetooth EDR:

79 channels are provided to this EUT:

| CHANNEL | FREQ. (MHz) | CHANNEL | FREQ. (MHz) | CHANNEL | FREQ. (MHz) | CHANNEL | FREQ. (MHz) |
|---|---|---|---|---|---|---|---|
| 0 | 2402 | 20 | 2422 | 40 | 2442 | 60 | 2462 |
| 1 | 2403 | 21 | 2423 | 41 | 2443 | 61 | 2463 |
| 2 | 2404 | 22 | 2424 | 42 | 2444 | 62 | 2464 |
| 3 | 2405 | 23 | 2425 | 43 | 2445 | 63 | 2465 |
| 4 | 2406 | 24 | 2426 | 44 | 2446 | 64 | 2466 |
| 5 | 2407 | 25 | 2427 | 45 | 2447 | 65 | 2467 |
| 6 | 2408 | 26 | 2428 | 46 | 2448 | 66 | 2468 |
| 7 | 2409 | 27 | 2429 | 47 | 2449 | 67 | 2469 |
| 8 | 2410 | 28 | 2430 | 48 | 2450 | 68 | 2470 |
| 9 | 2411 | 29 | 2431 | 49 | 2451 | 69 | 2471 |
| 10 | 2412 | 30 | 2432 | 50 | 2452 | 70 | 2472 |
| 11 | 2413 | 31 | 2433 | 51 | 2453 | 71 | 2473 |
| 12 | 2414 | 32 | 2434 | 52 | 2454 | 72 | 2474 |
| 13 | 2415 | 33 | 2435 | 53 | 2455 | 73 | 2475 |
| 14 | 2416 | 34 | 2436 | 54 | 2456 | 74 | 2476 |
| 15 | 2417 | 35 | 2437 | 55 | 2457 | 75 | 2477 |
| 16 | 2418 | 36 | 2438 | 56 | 2458 | 76 | 2478 |
| 17 | 2419 | 37 | 2439 | 57 | 2459 | 77 | 2479 |
| 18 | 2420 | 38 | 2440 | 58 | 2460 | 78 | 2480 |
| 19 | 2421 | 39 | 2441 | 59 | 2461 | | |

## 3.2.1 TEST MODE APPLICABILITY AND TESTED CHANNEL DETAIL

**For Bluetooth EDR:**

| EUT CONFIGURE MODE | APPLICABLE TO | | DESCRIPTION |
|---|---|---|---|
| | RE≥1G | RE<1G | |
| A | √ | √ | SKU 1 Pad |

Where **RE≥1G:** Radiated Emission above 1GHz **RE<1G:** Radiated Emission below 1GHz

**NOTE:** The EUT had been pre-tested on the positioned of each 3 axis. The worst case was found when positioned on **Z-plane**.

**RADIATED EMISSION TEST (ABOVE 1 GHz):**

☒ Pre-Scan has been conducted to determine the worst-case mode from all possible combinations between available modulations, antenna ports (if EUT with antenna diversity architecture) and packet type.

☒ Following channel(s) was (were) selected for the final test as listed below.

| EUT CONFIGURE MODE | AVAILABLE CHANNEL | TESTED CHANNEL | MODULATION TYPE | PACKET TYPE |
|---|---|---|---|---|
| A | 0 to 78 | 78 | GFSK | DH5 |

**RADIATED EMISSION TEST (BELOW 1 GHz):**

☒ Pre-Scan has been conducted to determine the worst-case mode from all possible combinations between available modulations, antenna ports (if EUT with antenna diversity architecture) and packet type.

☒ Following channel(s) was (were) selected for the final test as listed below.

| EUT CONFIGURE MODE | AVAILABLE CHANNEL | TESTED CHANNEL | MODULATION TYPE | PACKET TYPE |
|---|---|---|---|---|
| A | 0 to 78 | 78 | GFSK | DH5 |

**TEST CONDITION:**

| APPLICABLE TO | ENVIRONMENTAL CONDITIONS | INPUT POWER | TESTED BY |
|---|---|---|---|
| RE≥1G | 25deg. C, 65%RH | 120Vac, 60Hz | Anson Lin |
| RE<1G | 25deg. C, 65%RH | 120Vac, 60Hz | Anson Lin |

## 3.3 GENERAL DESCRIPTION OF APPLIED STANDARDS

The EUT is a RF Product. According to the specifications of the manufacturer, it must comply with the requirements of the following standards:

**FCC Part 15, Subpart C (15.247)**
**ANSI C63.10-2009**
**FCC Public Notice DA 00-705**

All test items have been performed and recorded as per the above standards.

**NOTE:** The EUT is also considered as a kind of computer peripheral, because the connection to computer is necessary for typical use. It has been verified to comply with the requirements of FCC Part 15, Subpart B, Class B. The test report has been issued separately.

## 3.4 DESCRIPTION OF SUPPORT UNITS

The EUT has been tested as an independent unit together with other necessary accessories or support units. The following support units or accessories were used to form a representative test configuration during the tests.

| NO. | PRODUCT | BRAND | MODEL NO. | SERIAL NO. | FCC ID |
|---|---|---|---|---|---|
| 1 | EARPHONE | Acon | CW-010M.V | N/A | N/A |

| NO. | SIGNAL CABLE DESCRIPTION OF THE ABOVE SUPPORT UNITS |
|---|---|
| 1 | N/A |

**NOTE:**

1. All power cords of the above support units are non-shielded (1.8m).

### 3.4.1 CONFIGURATION OF SYSTEM UNDER TEST

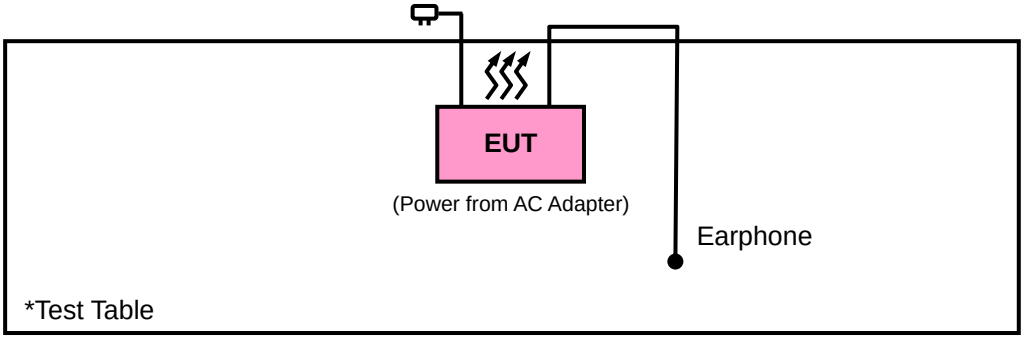

# 4. TEST TYPES AND RESULTS (FOR Bluetooth EDR)

## 4.1 RADIATED EMISSION AND BANDEDGE MEASUREMENT

### 4.1.1 LIMITS OF RADIATED EMISSION AND BANDEDGE MEASUREMENT

Radiated emissions which fall in the restricted bands must comply with the radiated emission limits specified as below table. Other emissions shall be at least 20dB below the highest level of the desired power:

| FREQUENCIES (MHz) | FIELD STRENGTH (microvolts/meter) | MEASUREMENT DISTANCE (meters) |
|---|---|---|
| 0.009 ~ 0.490 | 2400/F(kHz) | 300 |
| 0.490 ~ 1.705 | 24000/F(kHz) | 30 |
| 1.705 ~ 30.0 | 30 | 30 |
| 30 ~ 88 | 100 | 3 |
| 88 ~ 216 | 150 | 3 |
| 216 ~ 960 | 200 | 3 |
| Above 960 | 500 | 3 |

**NOTE**:

1. The lower limit shall apply at the transition frequencies.
2. Emission level (dBuV/m) = 20 log Emission level (uV/m).
3. For frequencies above 1000MHz, the field strength limits are based on average detector, however, the peak field strength of any emission shall not exceed the maximum permitted average limits, specified above by more than 20dB under any condition of modulation.

### 4.1.2 TEST INSTRUMENTS

| DESCRIPTION & MANUFACTURER | MODEL NO. | SERIAL NO. | DATE OF CALIBRATION | DUE DATE OF CALIBRATION |
|---|---|---|---|---|
| Test Receiver ROHDE & SCHWARZ | ESCI | 100744 | Apr. 15, 2013 | Apr. 14, 2014 |
| Spectrum Analyzer ROHDE & SCHWARZ | FSU43 | 101261 | Dec. 17, 2012 | Dec. 16, 2013 |
| BILOG Antenna SCHWARZBECK | VULB9168 | 9168-472 | Mar. 25, 2013 | Mar. 24, 2014 |
| HORN Antenna SCHWARZBECK | BBHA 9120 D | 9120D-969 | Jan. 07, 2013 | Jan. 06, 2014 |
| HORN Antenna SCHWARZBECK | BBHA 9170 | 9170-480 | Dec. 25, 2012 | Dec. 24, 2013 |
| Loop Antenna | HFH2-Z2 | 100070 | Jan. 31, 2012 | Jan. 30, 2014 |
| Preamplifier EMCI | EMC 012645 | 980115 | Dec. 28, 2012 | Dec. 27, 2013 |
| Preamplifier EMCI | EMC 184045 | 980116 | Dec. 28, 2012 | Dec. 27, 2013 |
| Preamplifier EMCI | EMC 330H | 980112 | Dec. 28, 2012 | Dec. 27, 2013 |
| RF signal cable HUBER+SUHNNER | SUCOFLEX 104 | 309219/4 | Oct. 18, 2013 | Oct. 17, 2014 |
| RF signal cable HUBER+SUHNNER | SUCOFLEX 104 | 250130/4 | Oct. 18, 2013 | Oct. 17, 2014 |
| RF signal cable Worken | RG-213 | NA | Dec. 29, 2012 | Dec. 28, 2013 |
| Software | E3 6.120103 | NA | NA | NA |
| Antenna Tower MF | MFA-440H | NA | NA | NA |
| Turn Table MF | MFT-201SS | NA | NA | NA |
| Antenna Tower &Turn Table Controller MF | MF-7802 | NA | NA | NA |

**NOTE:** 1. The calibration interval of the above test instruments is 12 months and the calibrations are traceable to NML/ROC and NIST/USA.
2. The calibration interval of the loop antenna is 24 months and the calibrations are traceable to NML/ROC and NIST/USA.
3. The test was performed in HwaYa Chamber 10.
4. The horn antenna and HP preamplifier (model: 8449B) are used only for the measurement of emission frequency above 1GHz if tested.
5. The FCC Site Registration No. is 690701.
6. The IC Site Registration No. is IC 7450F-10.

### 4.1.3 TEST PROCEDURES

a. The EUT was placed on the top of a rotating table 0.8 meters above the ground at a 3 meter semi-anechoic chamber. The table was rotated 360 degrees to determine the position of the highest radiation.

b. The EUT was set 3 meters away from the interference-receiving antenna, which was mounted on the top of a variable-height antenna tower.

c. The antenna is a broadband antenna, and its height is varied from one meter to four meters above the ground to determine the maximum value of the field strength. Both horizontal and vertical polarizations of the antenna are set to make the measurement.

d. For each suspected emission, the EUT was arranged to its worst case and then the antenna was tuned to heights from 1 meter to 4 meters and the rotatable table was turned from 0 degrees to 360 degrees to find the maximum reading.

e. The test-receiver system was set to Peak Detect Function and Specified Bandwidth with Maximum Hold Mode.

f. If the emission level of the EUT in peak mode was lower than the limit specified, then testing could be stopped and the peak values of the EUT would be reported. Otherwise the emissions would be re-tested one by one using peak, quasi-peak or average method as specified and then reported in a data sheet.

**NOTE:**

1. The resolution bandwidth and video bandwidth of test receiver/spectrum analyzer is 120kHz for Quasi-peak detection at frequency below 1GHz.
2. The resolution bandwidth of test receiver/spectrum analyzer is 1MHz and video bandwidth is 3MHz for Peak detection at frequency above 1GHz.
3. The resolution bandwidth of test receiver/spectrum analyzer is 1MHz and the video bandwidth is 10Hz for Average detection (AV) at frequency above 1GHz.
4. All modes of operation were investigated and the worst-case emissions are reported.

### 4.1.4 DEVIATION FROM TEST STANDARD

No deviation.

## 4.1.5 TEST SETUP

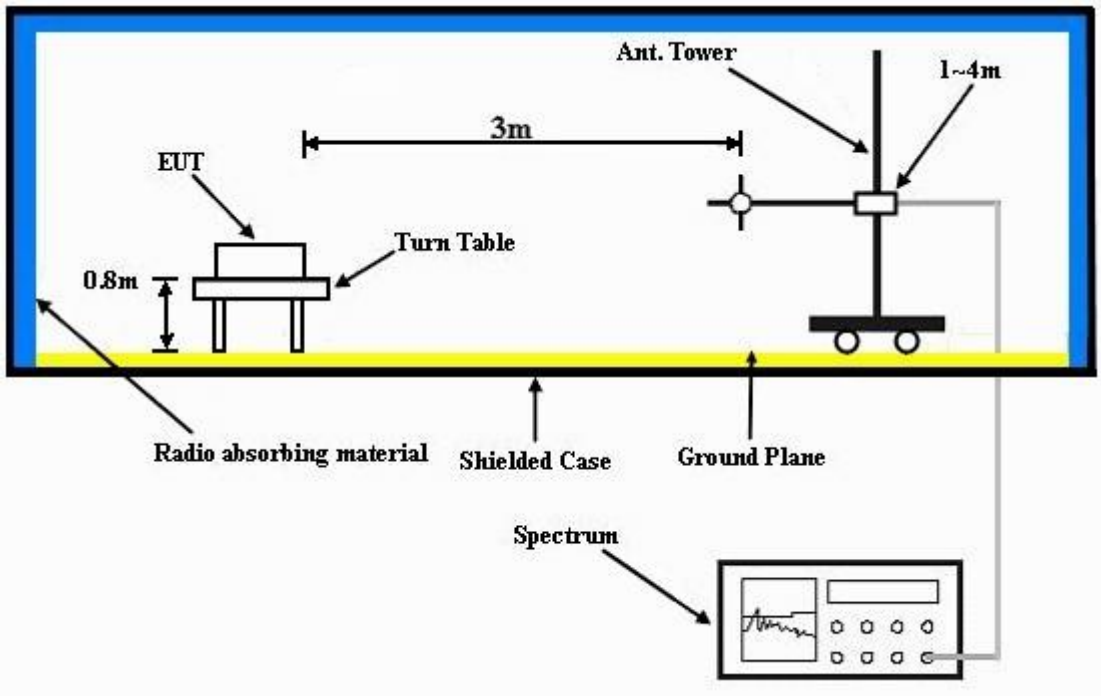


For the actual test configuration, please refer to the attached file (Test Setup Photo).

## 4.1.6 EUT OPERATING CONDITIONS

a. Placed the EUT on a testing table.
b. Use the software to control the EUT under transmission condition continuously at specific channel frequency.

## 4.1.7 TEST RESULTS

**ABOVE 1GHz WORST-CASE DATA：GFSK**

| EUT TEST CONDITION | | MEASUREMENT DETAIL | |
|---|---|---|---|
| **CHANNEL** | Channel 78 | **FREQUENCY RANGE** | 1GHz ~ 25GHz |
| **INPUT POWER (SYSTEM)** | 120Vac, 60 Hz | **DETECTOR FUNCTION** | Peak (PK)<br>Average (AV) |
| **ENVIRONMENTAL CONDITIONS** | 25deg. C, 65%RH | **TESTED BY** | Anson Lin |

| ANTENNA POLARITY & TEST DISTANCE: HORIZONTAL AT 3 M | | | | | | | | | | |
|---|---|---|---|---|---|---|---|---|---|---|
| **FREQ. (MHz)** | **EMISSION LEVEL (dBuV/m)** | **READ LEVEL (dBuV)** | **LIMIT (dBuV/m)** | **MARGIN (dB)** | **ANTENNA FACTOR (dB/m)** | **CABLE LOSS (dB)** | **PREAMP FACTOR (dB)** | **ANTENNA HEIGHT (cm)** | **TABLE ANGLE (Degree)** | **REMARK** |
| 2382 | 32.65 | 39.77 | 54 | -21.35 | 26.86 | 3.52 | 37.5 | 100 | 356 | Average |
| 2382 | 46.37 | 53.49 | 74 | -27.63 | 26.86 | 3.52 | 37.5 | 100 | 356 | Peak |
| 2480 | 91.59 | 98.16 | | | 27.15 | 3.6 | 37.32 | 100 | 356 | Average |
| 2480 | 103.22 | 109.79 | | | 27.15 | 3.6 | 37.32 | 100 | 356 | Peak |
| 2484 | 33.67 | 40.24 | 54 | -20.33 | 27.15 | 3.6 | 37.32 | 100 | 356 | Average |
| 2484 | 52.37 | 58.94 | 74 | -21.63 | 27.15 | 3.6 | 37.32 | 100 | 356 | Peak |
| **ANTENNA POLARITY & TEST DISTANCE: VERTICAL AT 3 M** | | | | | | | | | | |
| **FREQ. (MHz)** | **EMISSION LEVEL (dBuV/m)** | **READ LEVEL (dBuV)** | **LIMIT (dBuV/m)** | **MARGIN (dB)** | **ANTENNA FACTOR (dB/m)** | **CABLE LOSS (dB)** | **PREAMP FACTOR (dB)** | **ANTENNA HEIGHT (cm)** | **TABLE ANGLE (Degree)** | **REMARK** |
| 2366 | 32.67 | 39.84 | 54 | -21.33 | 26.81 | 3.52 | 37.5 | 120 | 219 | Average |
| 2366 | 46.35 | 53.52 | 74 | -27.65 | 26.81 | 3.52 | 37.5 | 120 | 219 | Peak |
| 2480 | 86.02 | 92.59 | | | 27.15 | 3.6 | 37.32 | 120 | 219 | Average |
| 2480 | 97.37 | 103.94 | | | 27.15 | 3.6 | 37.32 | 120 | 219 | Peak |
| 2484 | 33.59 | 40.16 | 54 | -20.41 | 27.15 | 3.6 | 37.32 | 120 | 219 | Average |
| 2484 | 47.48 | 54.05 | 74 | -26.52 | 27.15 | 3.6 | 37.32 | 120 | 219 | Peak |
| 4960 | 41.9 | 57.94 | 54 | -12.1 | 31.16 | 5.84 | 53.04 | 123 | 240 | Average |
| 4960 | 47.82 | 63.86 | 74 | -26.18 | 31.16 | 5.84 | 53.04 | 123 | 240 | Peak |

**REMARKS:**

1. 2480MHz: Fundamental frequency.
2. Emission Level = Read Level + Antenna Factor + Cable Loss - Preamp Factor
   Margin Value = Emission Level - Limit Value

## BELOW 1GHz WORST-CASE DATA：GFSK

| EUT TEST CONDITION | | MEASUREMENT DETAIL | |
|---|---|---|---|
| CHANNEL | Channel 78 | FREQUENCY RANGE | 30MHz ~ 1GHz |
| INPUT POWER (SYSTEM) | 120Vac, 60 Hz | DETECTOR FUNCTION | Peak (PK)<br>Quasi-Peak (QP) |
| ENVIRONMENTAL CONDITIONS | 25deg. C, 65%RH | TESTED BY | Anson Lin |

| ANTENNA POLARITY & TEST DISTANCE: HORIZONTAL AT 3 M | | | | | | | | | | |
|---|---|---|---|---|---|---|---|---|---|---|
| FREQ. (MHz) | EMISSION LEVEL (dBuV/m) | READ LEVEL (dBuV) | LIMIT (dBuV/m) | MARGIN (dB) | ANTENNA FACTOR (dB/m) | CABLE LOSS (dB) | PREAMP FACTOR (dB) | ANTENNA HEIGHT (cm) | TABLE ANGLE (Degree) | REMARK |
| 37.83 | 23.89 | 41.04 | 40 | -16.11 | 13.24 | 0.63 | 31.02 | 100 | 135 | Peak |
| 172.29 | 21.79 | 40.62 | 43.5 | -21.71 | 11.47 | 1.46 | 31.76 | 100 | 178 | Peak |
| 286 | 17.08 | 35.25 | 46 | -28.92 | 11.85 | 1.88 | 31.9 | 100 | 265 | Peak |
| 438.6 | 20.4 | 33.73 | 46 | -25.6 | 16.1 | 2.57 | 32 | 100 | 204 | Peak |
| 694.8 | 25.28 | 32.94 | 46 | -20.72 | 20.75 | 3.41 | 31.82 | 100 | 166 | Peak |
| 939.8 | 28.11 | 32.26 | 46 | -17.89 | 23.73 | 4.05 | 31.93 | 100 | 302 | Peak |
| **ANTENNA POLARITY & TEST DISTANCE: VERTICAL AT 3 M** | | | | | | | | | | |
| FREQ. (MHz) | EMISSION LEVEL (dBuV/m) | READ LEVEL (dBuV) | LIMIT (dBuV/m) | MARGIN (dB) | ANTENNA FACTOR (dB/m) | CABLE LOSS (dB) | PREAMP FACTOR (dB) | ANTENNA HEIGHT (cm) | TABLE ANGLE (Degree) | REMARK |
| 30.54 | 27.4 | 45.81 | 40 | -12.6 | 12.14 | 0.57 | 31.12 | 100 | 241 | QP |
| **37.61** | **29.43** | **46.58** | **40** | **-10.57** | **13.24** | **0.63** | **31.02** | **100** | **226** | **QP** |
| 221.16 | 15.08 | 34.84 | 46 | -30.92 | 10.26 | 1.7 | 31.72 | 100 | 112 | Peak |
| 400.1 | 18.56 | 32.9 | 46 | -27.44 | 15.35 | 2.43 | 32.12 | 100 | 153 | Peak |
| 654.2 | 25.19 | 33.65 | 46 | -20.81 | 20.27 | 3.26 | 31.99 | 100 | 214 | Peak |
| 916.7 | 27.72 | 32.14 | 46 | -18.28 | 23.6 | 4 | 32.02 | 100 | 162 | Peak |

**REMARKS:**

1. Emission Level = Read Level + Antenna Factor + Cable Loss - Preamp Factor
   Margin Value = Emission Level - Limit Value

# 5. PHOTOGRAPHS OF THE TEST CONFIGURATION

Please refer to the attached file (Test Setup Photo).

# 6. INFORMATION ON THE TESTING LABORATORIES

We, Bureau Veritas Consumer Products Services (H.K.) Ltd., Taoyuan Branch, were founded in 1988 to provide our best service in EMC, Radio, Telecom and Safety consultation. Our laboratories are accredited and approved according to ISO/IEC 17025.

If you have any comments, please feel free to contact us at the following:

**Linko EMC/RF Lab**:
Tel: 886-2-26052180
Fax: 886-2-26051924

**Hsin Chu EMC/RF Lab**:
Tel: 886-3-5935343
Fax: 886-3-5935342

**Hwa Ya EMC/RF/Safety Telecom Lab**:
Tel: 886-3-3183232
Fax: 886-3-3270892

**Email:** service.adt@tw.bureauveritas.com
**Web Site:** www.bureauveritas-adt.com

The address and road map of all our labs can be found in our web site also.

# 7. APPENDIX A - MODIFICATIONS RECORDERS FOR ENGINEERING CHANGES TO THE EUT BY THE LAB

No modifications were made to the EUT by the lab during the test.

**--- END ---**