MARK	ISSUE	REVISER	DATE	REV.	DCN NO.

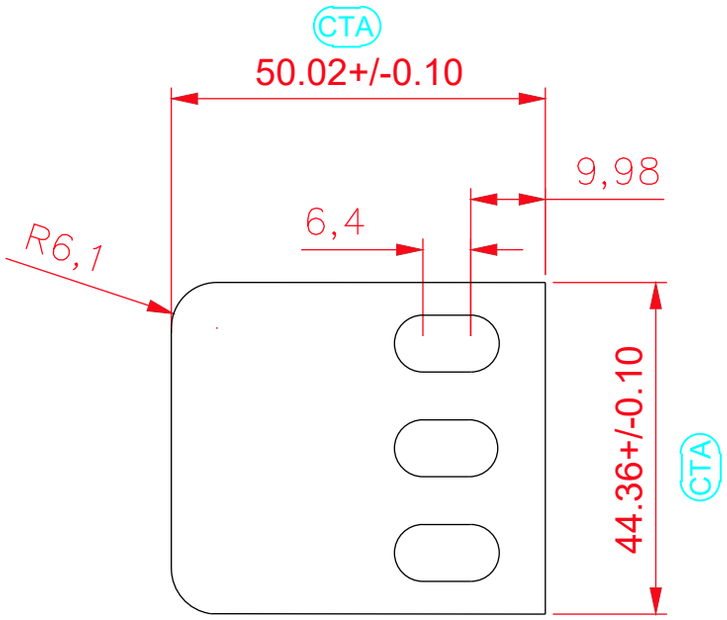

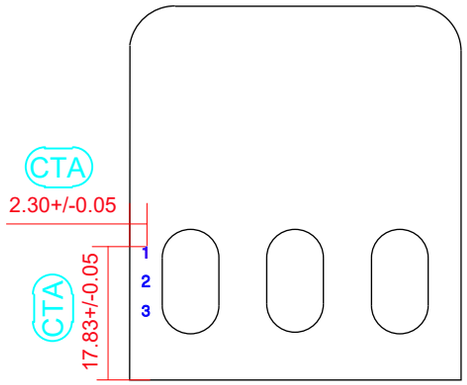

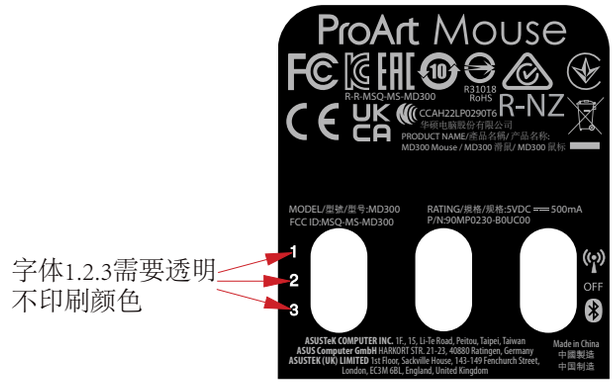

Scale: 1:1

Note:

1.Material is:透明PET+雾P，成品厚度T=0.15+0.0/-0.015
2.Background color: Black,
3.Lettering/barcode color: 8403C；字体1.2.3需要透明、不印刷颜色
4.The part is according to the latest version HS-301 of LITEON.
5.Unit:mm
6.Tolerance:+/-0.1mm
7.The adhesive force:3.5kgf min(90度拉拔測試規格)or 1.2kgf min(180度剝離測試規格)
8. Rolling style: the letter is positive when pick up the label.
9.Array:single file.
10. (XX) FAI: First Article Inspection dimension
(CTA) CTA: Dimensions which are critical to assembly
(CTQ) CTQ:Dimensions to be checked during IQC
(CPK) CPK: Dimensions to measure/monitor process capability
(X.XX): Dimensions in brackets are reference dimensions

SCALE: 1:1	TOLERANCE UNSPECIFIED: .XXX ±0.050, .XX ±0.10, .X ±0.2, . ±1, ANGLE ±0.5°	LITEON® SILITEK ELECTRONICS(DONGGUAN)CO.,LTD	
UNIT: mm			
DRAWN: susieyang		THIRD ANGLE	TITLE: SM9361 FCC Label
DESIGNER: susieyang		SHEET 1 OF 1	
CHECKED: Ivy Chung			
APPROVED: KC Wang		DRAWING NO.: 836-27758-00A	

SIZE	A4	REV.	20220105