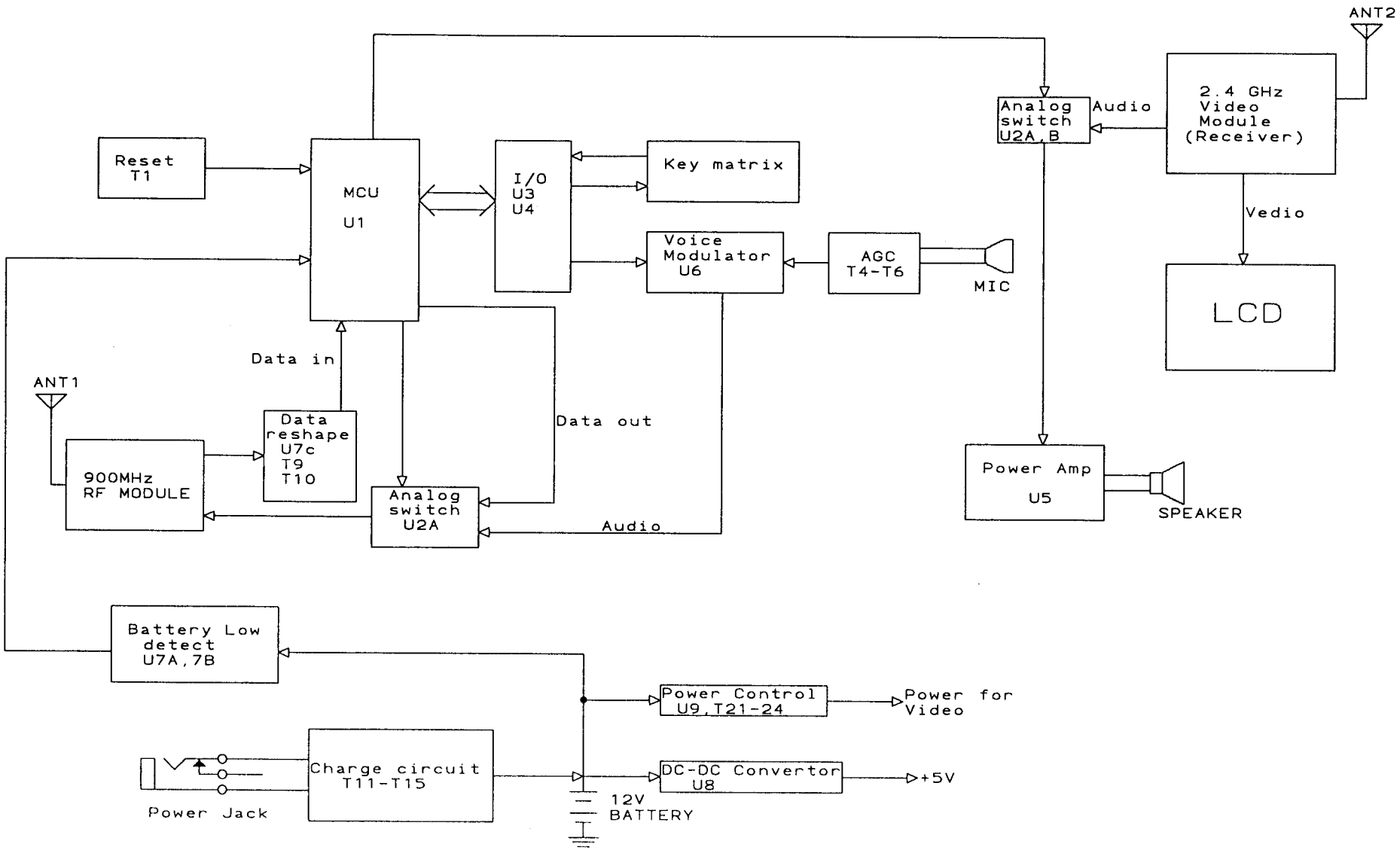

REMOTE CONTROL BLOCK DIAGRAM