| | B 150-174 | D1 218-230 | D2 240-260 | |
|---|---|---|---|---|
| C6 | 33 | 15 | 18 | |
| C7 | 56 | 24 | 33 | |
| C8 | 56 | 24 | 27 | |
| | | | | |
| | | | | |
| C66 | 22 | 10 | 10 | |
| C10 | 47 | 39 | 39 | |
| C11 | 15 | 20 | 12 | |
| C13 | 18 | 18 | 12 | |
| C14 | 10 | 27 | 15 | |
| L1 | 56 | 39 | 33 | |
| L4,5,7,8 | Green | RED | RED | |
| C19 | 7 | 15 | 18 | |
| L6 | -3B | -2B(Unsh.) | -2B(Unsh.) | |
| R3 | 1.5k | 3.3K | 1.5k | |
| R4 | 6.8K | 4.7k | 6.8K | |
| R5 | 1K | 2.2K | 1K | |
| C16 | 10 | 8 | 6 | |
| C30,21 | 1.0 | .75 | .75 | |
| C18 | 10 | 12 | 5 | |
| C20 | 220 | 33 | 18 | |
| C19 | 7 | 15 | 18 | |
| L12 | 56 | 27 | 22 | |
| C49 | 10 | NP | NP | |
| L14 | 33 | 22 | 22 | |
| C53 | 10 | 18 | 22 | |
| C59 | 8 | NP | 8 | |
| L16 | 8 | Jumper | Jumper | |
| L18 | 10T | 3T | 3T | |
| L19 | 10T | 8T | 6T | |
| C56 | 22 | 18 | 22 | |
| C67 | 40 | 30 | 30 | |
| C65 | 40 | 20 | 10 | |

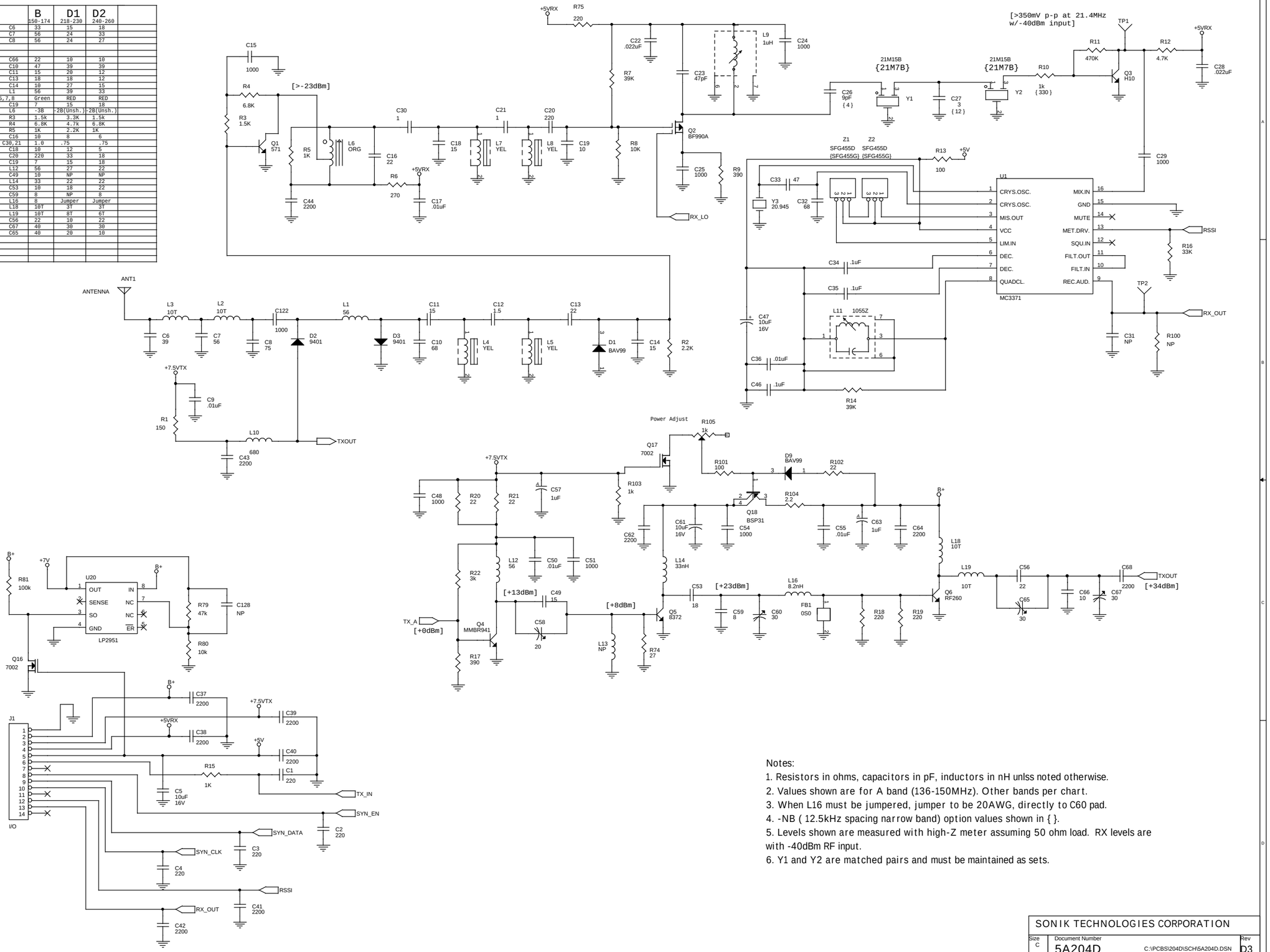


Notes:
1. Resistors in ohms, capacitors in pF, inductors in nH unlss noted otherwise.
2. Values shown are for A band (136-150MHz). Other bands per chart.
3. When L16 must be jumpered, jumper to be 20AWG, directly to C60 pad.
4. -NB ( 12.5kHz spacing narrow band) option values shown in { }.
5. Levels shown are measured with high-Z meter assuming 50 ohm load. RX levels are with -40dBm RF input.
6. Y1 and Y2 are matched pairs and must be maintained as sets.

SONIK TECHNOLOGIES CORPORATION

| Size | Document Number | Rev |
|---|---|---|
| C | 5A204D C:\PCBS\204D\SCH\5A204D.DSN | D3 |

Date: Thursday, November 19, 1998 Sheet 1 of 2

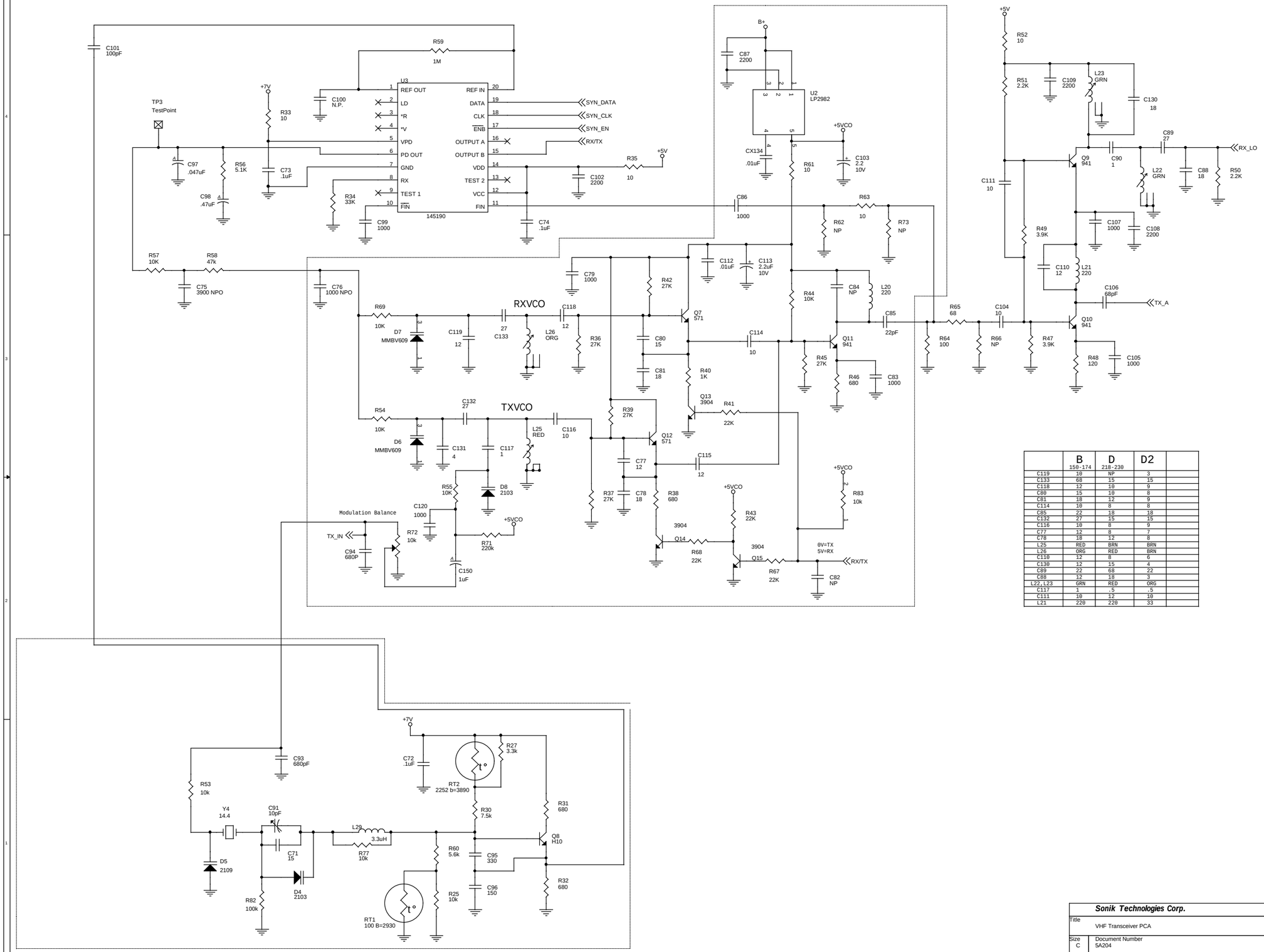


| | B 150-174 | D 218-230 | D2 | |
|---|---|---|---|---|
| C119 | 10 | NP | 3 | |
| C133 | 68 | 15 | 15 | |
| C118 | 12 | 10 | 9 | |
| C80 | 15 | 10 | 8 | |
| C81 | 18 | 12 | 9 | |
| C114 | 10 | 8 | 8 | |
| C85 | 22 | 18 | 18 | |
| C132 | 27 | 15 | 15 | |
| C116 | 10 | 8 | 9 | |
| C77 | 12 | 8 | 7 | |
| C78 | 18 | 12 | 8 | |
| L25 | RED | BRN | BRN | |
| L26 | ORG | RED | BRN | |
| C110 | 12 | 8 | 6 | |
| C130 | 12 | 15 | 4 | |
| C89 | 22 | 68 | 22 | |
| C88 | 12 | 18 | 3 | |
| L22,L23 | GRN | RED | ORG | |
| C117 | 1 | .5 | .5 | |
| C111 | 10 | 12 | 10 | |
| L21 | 220 | 220 | 33 | |

**Sonik Technologies Corp.**

Title: VHF Transceiver PCA

Size: C | Document Number: 5A204 | Rev: D3

Date: Thursday, November 19, 1998 | Sheet 2 of 2