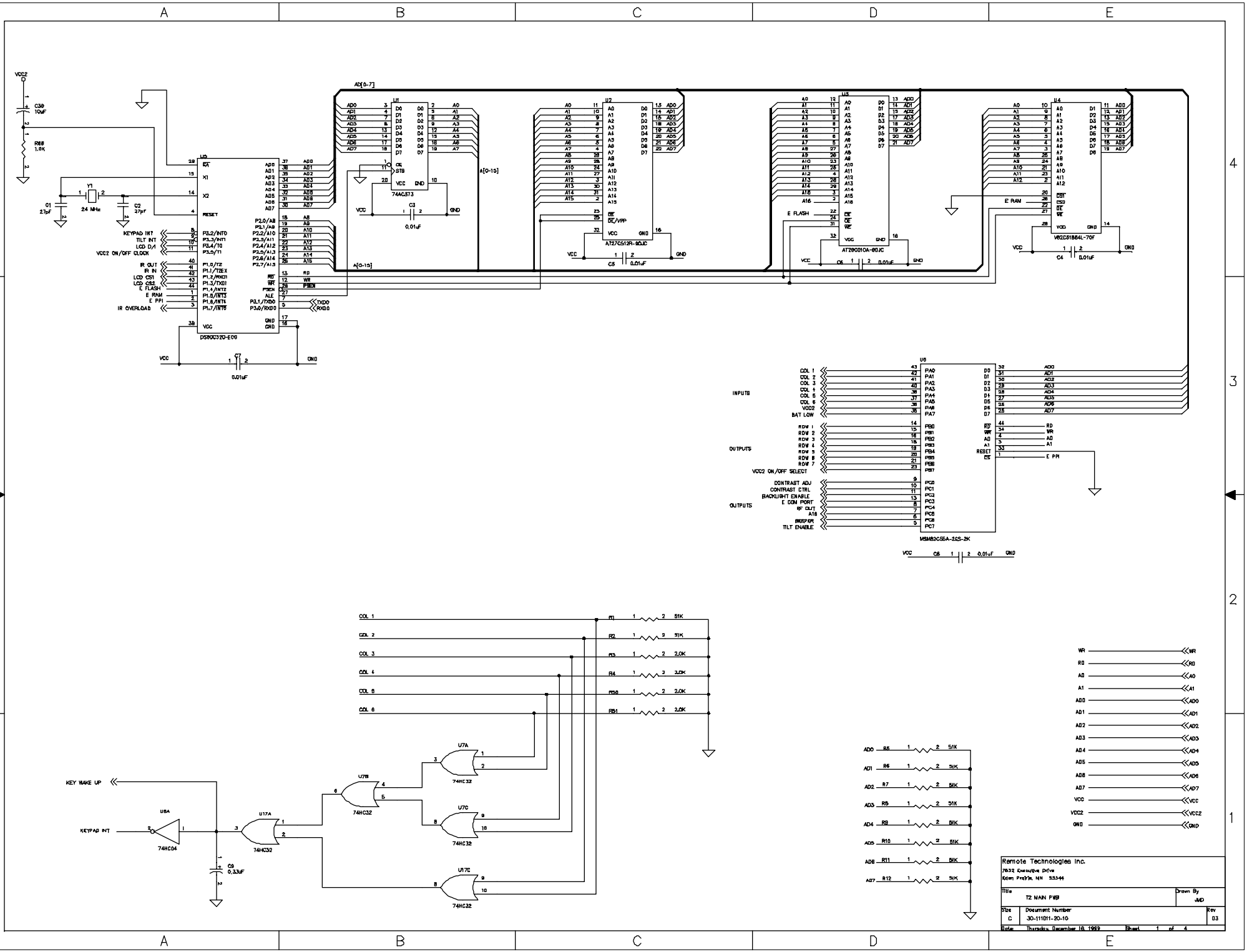
VCC2
C39 10uF
R68 1.0K
Y1 24 MHz
C1 27pF
C2 27pF
U5 DS80C320-EC0
KEYPAD INT
TILT INT
LCD D/I
VCC2 ON/OFF CLOCK
IR OUT
IR IN
LCD CS1
LCD CS2
E FLASH
E RAM
E PPI
IR OVERLOAD
U1 74AC373
U2 AT27C512R-90JC
U3 AT29C010A-90JC
U4 V62C51864L-70F
U6 MSM82C55A-2GS-2K
INPUTS
OUTPUTS
COL 1
COL 2
COL 3
COL 4
COL 5
COL 6
VCC2
BAT LOW
ROW 1
ROW 2
ROW 3
ROW 4
ROW 5
ROW 6
ROW 7
VCC2 ON/OFF SELECT
CONTRAST ADJ
CONTRAST CTL
BACKLIGHT ENABLE
E COM PORT
RF OUT
A16
BUZZER
TILT ENABLE
KEY WAKE UP
KEYPAD INT
U8A 74HC04
U17A 74HC32
U7B 74HC32
U7A 74HC32
U7C 74HC32
U17C 74HC32
C9 0.33uF
R1 51K
R2 51K
R3 2.0K
R4 3.0K
R5 2.0K
R6 2.0K
R5 51K
R6 51K
R7 51K
R8 51K
R9 51K
R10 51K
R11 51K
R12 51K
WR
RD
A0
A1
AD0
AD1
AD2
AD3
AD4
AD5
AD6
AD7
VCC
VCC2
GND
Remote Technologies Inc.
7632 Executive Drive
Eden Prairie, MN 55344
Title
T2 MAIN PWB
Drawn By
JMD
Size
C
Document Number
30-111011-20-10
Rev
03
Date
Thursday, December 18, 1997
Sheet 1 of 4

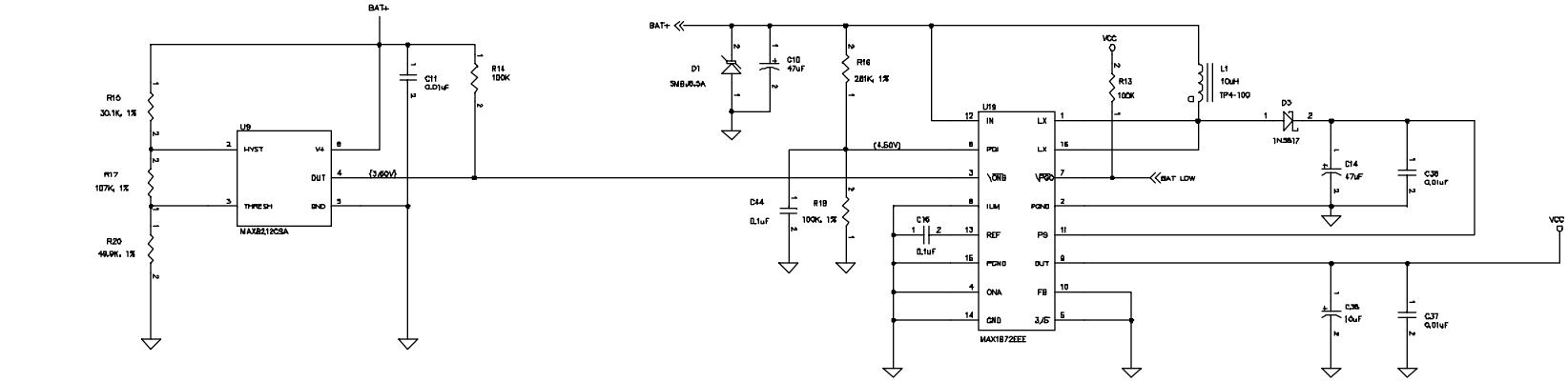

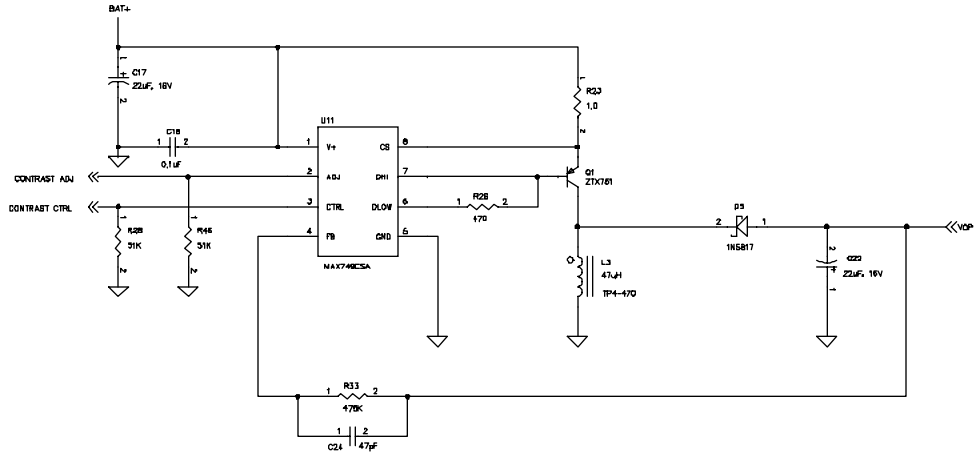

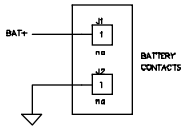

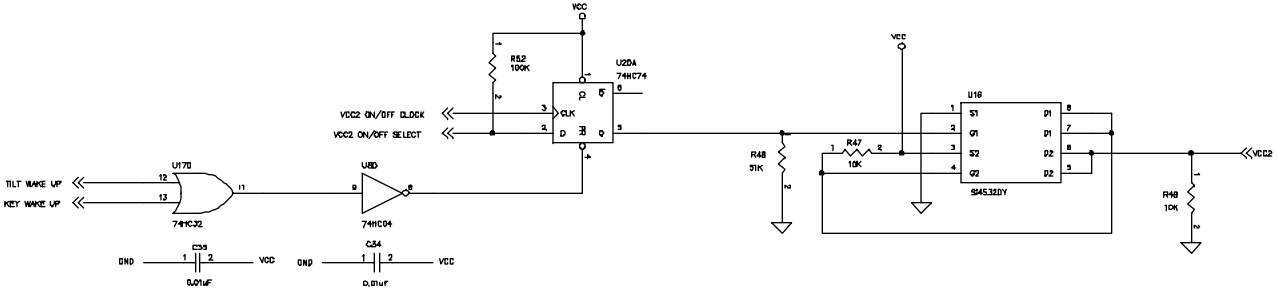

VCC
VCC2
BAT+
GND

Remote Technologies Inc.	
7632 Executive Drive Eden Prairie, MN 55344	
Title: T2 MAIN PWB	Drawn By: JMD
Size: C	Document Number: 30-111011-20-10	Rev: D3
Date: Thursday, December 18, 1999	Sheet 2 of 4

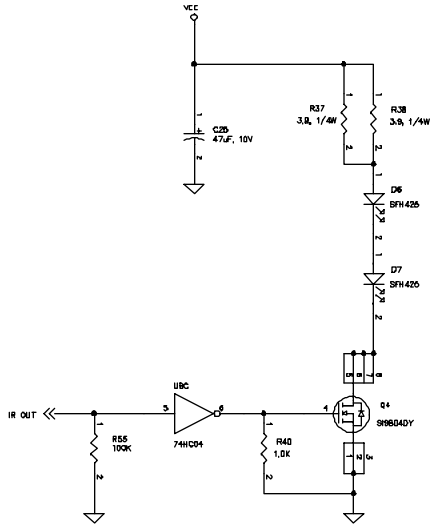

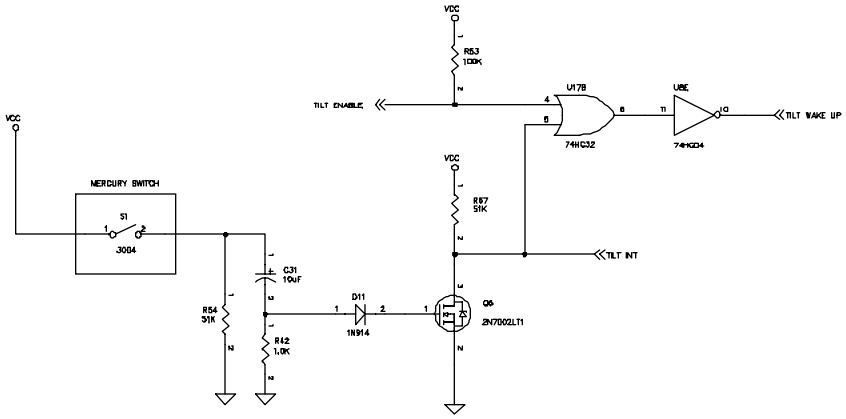

Spares:

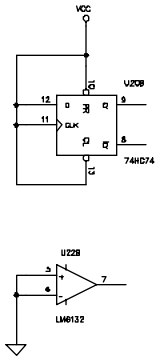

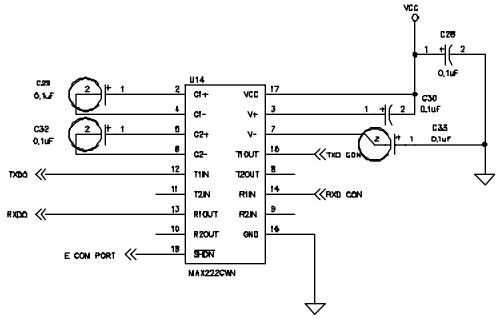

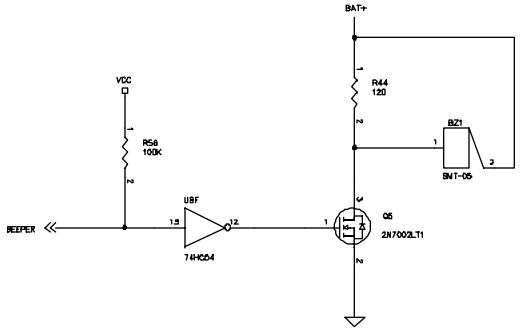

VCC — VCC
VCC2 — VCC2
BAT+ — BAT+
GND — GND

Remote Technologies Inc. 7632 Executive Drive Eden Prairie, MN 55344	
Title: T2 MAIN PWB	Drawn By: JMD
Size: C	Document Number: 30-111011-20-10	Rev: D3
Date: Thursday, December 16, 1999	Sheet 3 of 4

Rev	Description	ECO	Appr	Date
1	RELEASE FOR PROTOTYPE		JMD	05/08/97
2	ADDED BEEPER, CHANGED RF CONNECTOR, ADDED IR IN		JMD	12/18/97
3	CHANGED LCD INTERFACE, ADDED A16 LINE		JMD	02/18/98
A	ADDED RF TRANSMITTERS		JMD	03/20/98
B1	CHANGED U19 AND IR CAPTURE CIRCUIT		JMD	05/08/98
B2	CHANGED PIN-OUT OF U6		JMD	08/19/98
C1	ADDED FLIP-FLOP, ETC. FOR RESET		JMD	09/07/98
C2	NEW IR CAPTURE DESIGN, NEW LC TRANSMITTER		JMD	10/18/98
C3	CONNECT BACKLIGHT INVERTER AND IR LEDS TO VCC		JMD	11/06/98
C4	ADDED "VCC2 ON/OFF SELECT"		JMD	11/20/98
C5	CONNECT C25, R37, R38 TO VCC INSTEAD OF VCC2		JMD	11/30/98
D1	CHANGED U5 TO 80C320, ADDED D5 ETC. TO TILT SWITCH CKT, REDUCED VALUE OF R3,R4, R50,R51, EXPANDED JP3, REMOVED U15 ETC.		JMD	05/05/99
D2	CHANGED D6,D7 TO SMD; CHANGED VALUE OF R37,R38		JMD	05/27/99
D3	CHANGED VALUE OF R3,R4,R50, R51,R16,R17,R37,R38		JMD	08/18/99

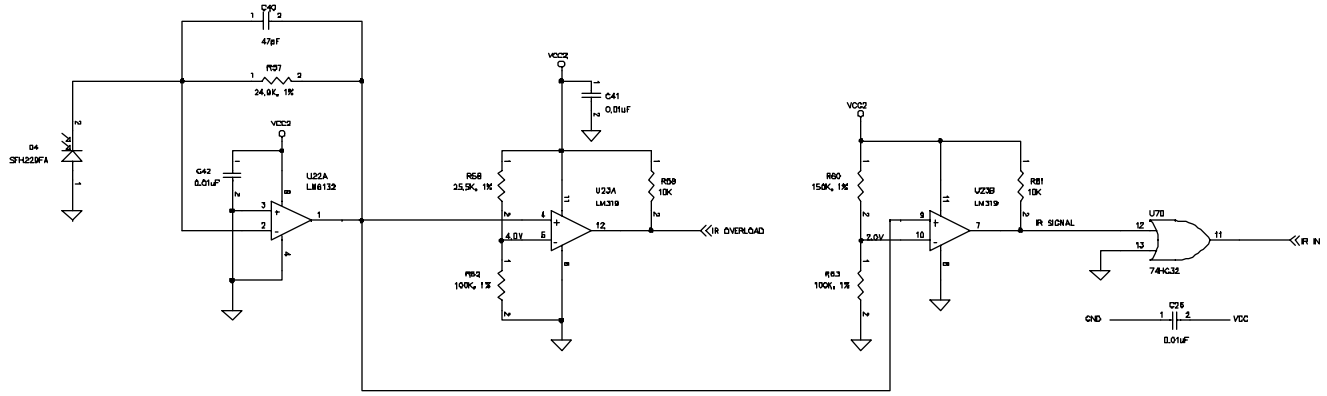

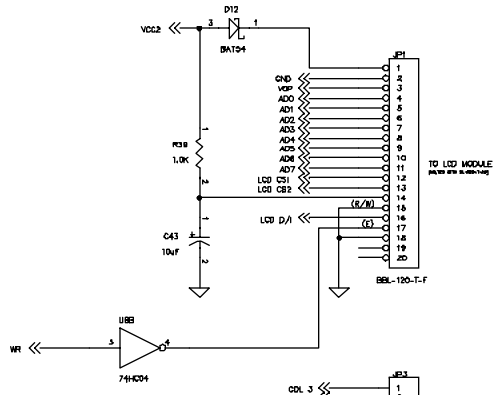

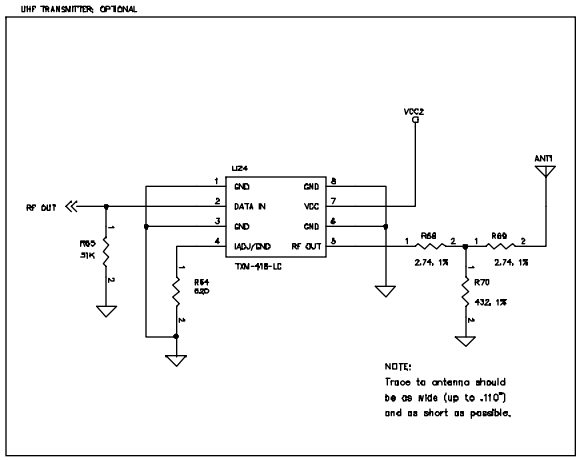

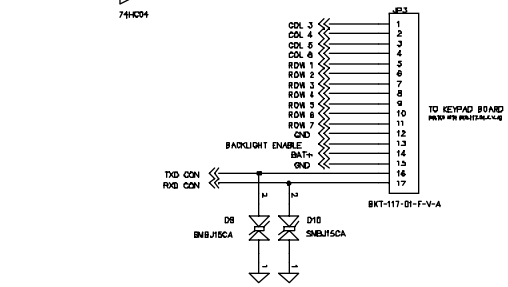

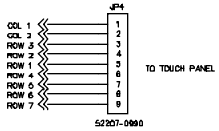

VCC	VCC
VCC2	VCC2
BAT+	BAT+
GND	GND

Remote Technologies Inc.
7632 Executive Drive
Eden Prairie, MN 55344

Title: T2 MAIN PWB		Drawn By: JMD
Size: C	Document Number: 30-210002-20-10	Rev: D3
Date: Thursday, December 16, 1999	Sheet 4 of 4	