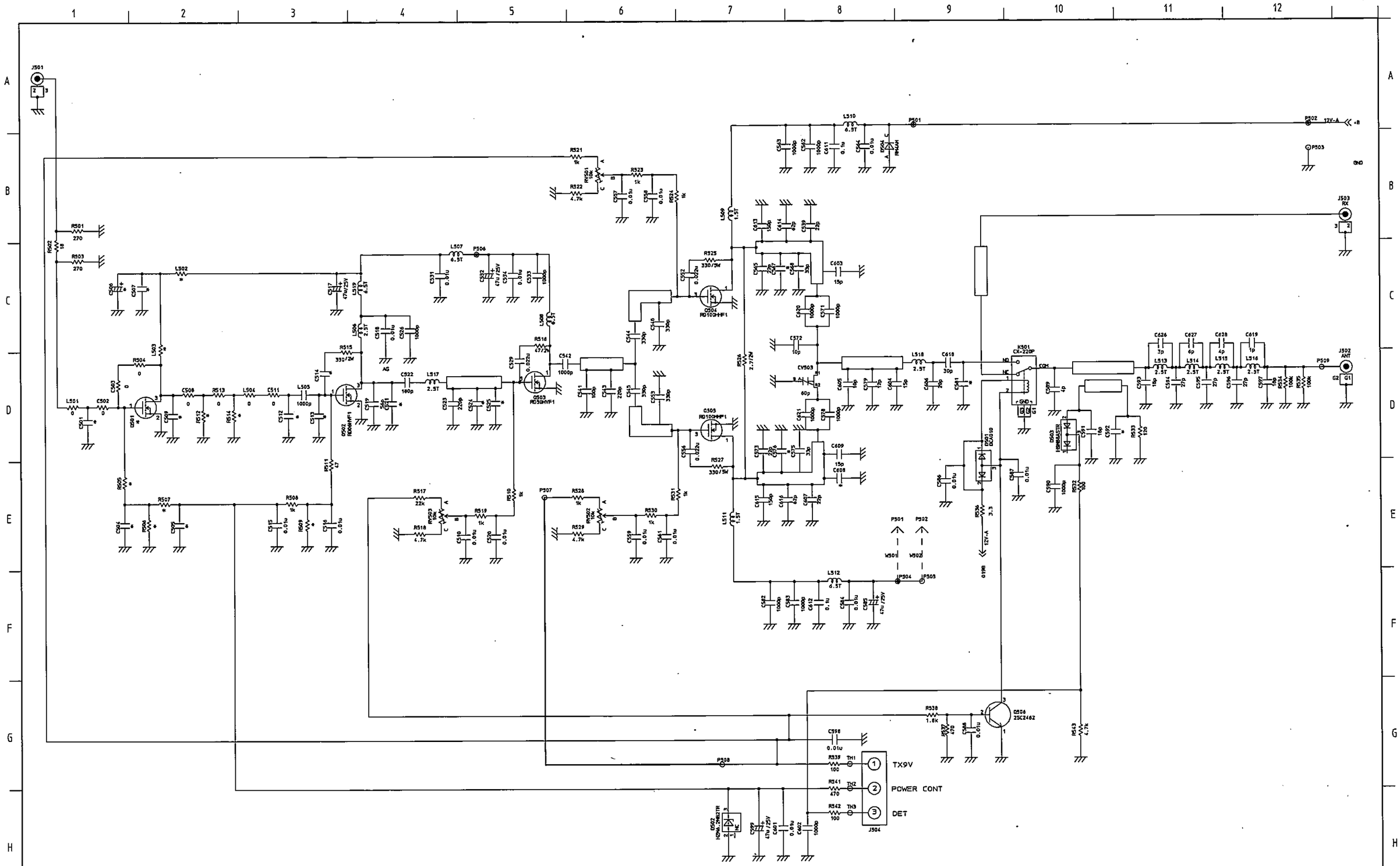


| SYMBOL | DATE | DESCRIPTION | (DRAWN) | DESIGNED |
|---|---|---|---|---|
| — | XX.XX.XX | (first edition) | | |

MODEL

| DESIGNED | DATE | APPROVED | DATE |
|---|---|---|---|
| Y. Kimura | Jan.25 '08 | Y. Yoshikawa | Jan.25 '08 |
| CHECKED | DATE | STORED | DATE |
| Y. Yoshikawa | Jan.25 '08 | | |

TOLERANCE

UNIT

SCALE

Prod. Code-Order No.

TITLE PA--X0002 SCHEMATIC DIAGRAM

REV. 0

SHEET 1/1

DWG. No.

Hitachi Kokusai Electric

DP932-2LE-C1