TX: FCC ID: MIBRF50201
RX: FCC ID: MIBRF50202

REVISIONS				
ZONE	REV.	DESCRIPTION	DATE	APPROVED

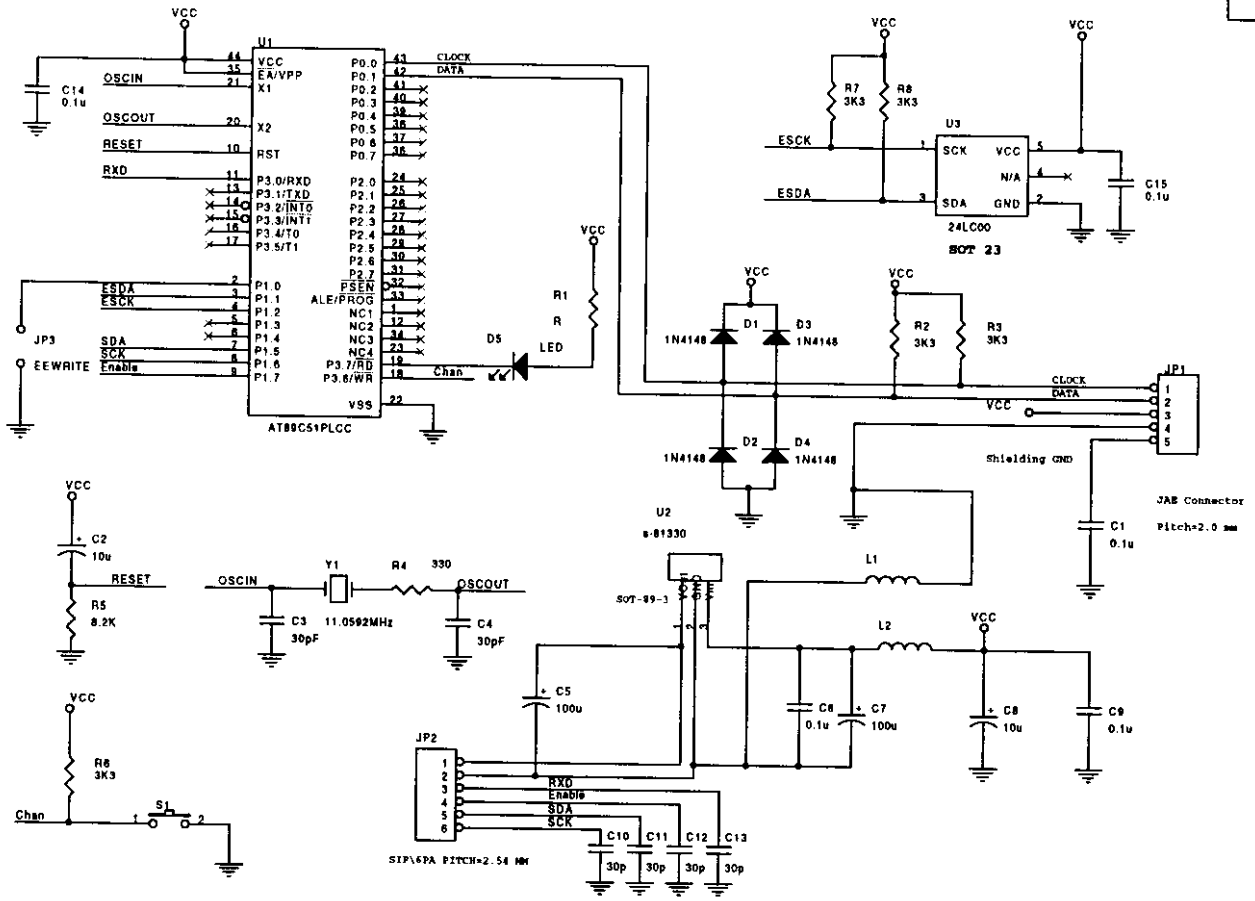

USED ON		
DRAWN		
ENGR.		
APVD.		

RF-Link SYSTEMS INC.
SBIP, HSINCHU, TAIWAN, R.O.C.

CODE | DWG TITLE: **Schematic RF Mouse Receiver**

Size: B | DWG NO. | REV: -

Scale | Sheet 1 of 1