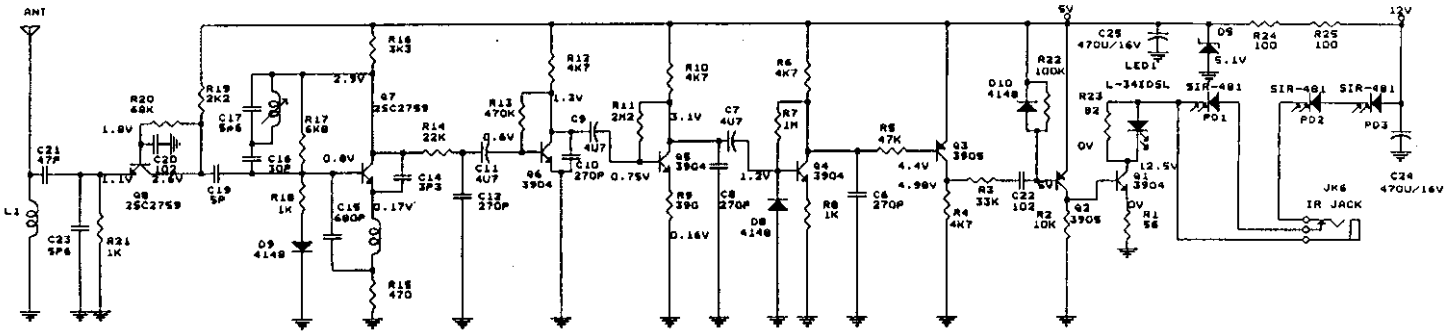FIGURE 2 *Schematic Diagram*