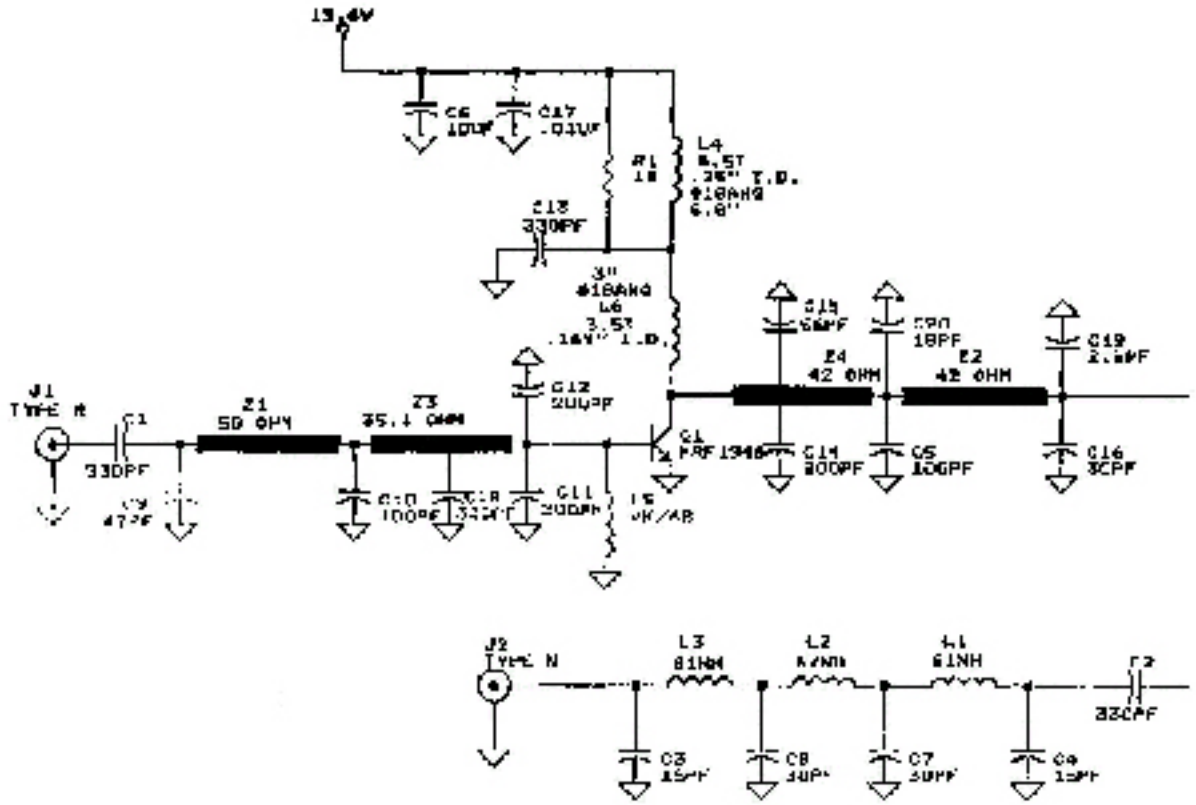

L1-L3 ARE 3.5T .25" I.D.
#18AWG 3.55"

EMR Corp
22402 N. 19th Avenue
Phoenix, Arizona 85027

TITLE:

DOCUMENT #: SIZE: A REV: A

DATE: OCTOBER 13, 1998 SHEET: 1 of 1

SCHEMATICS