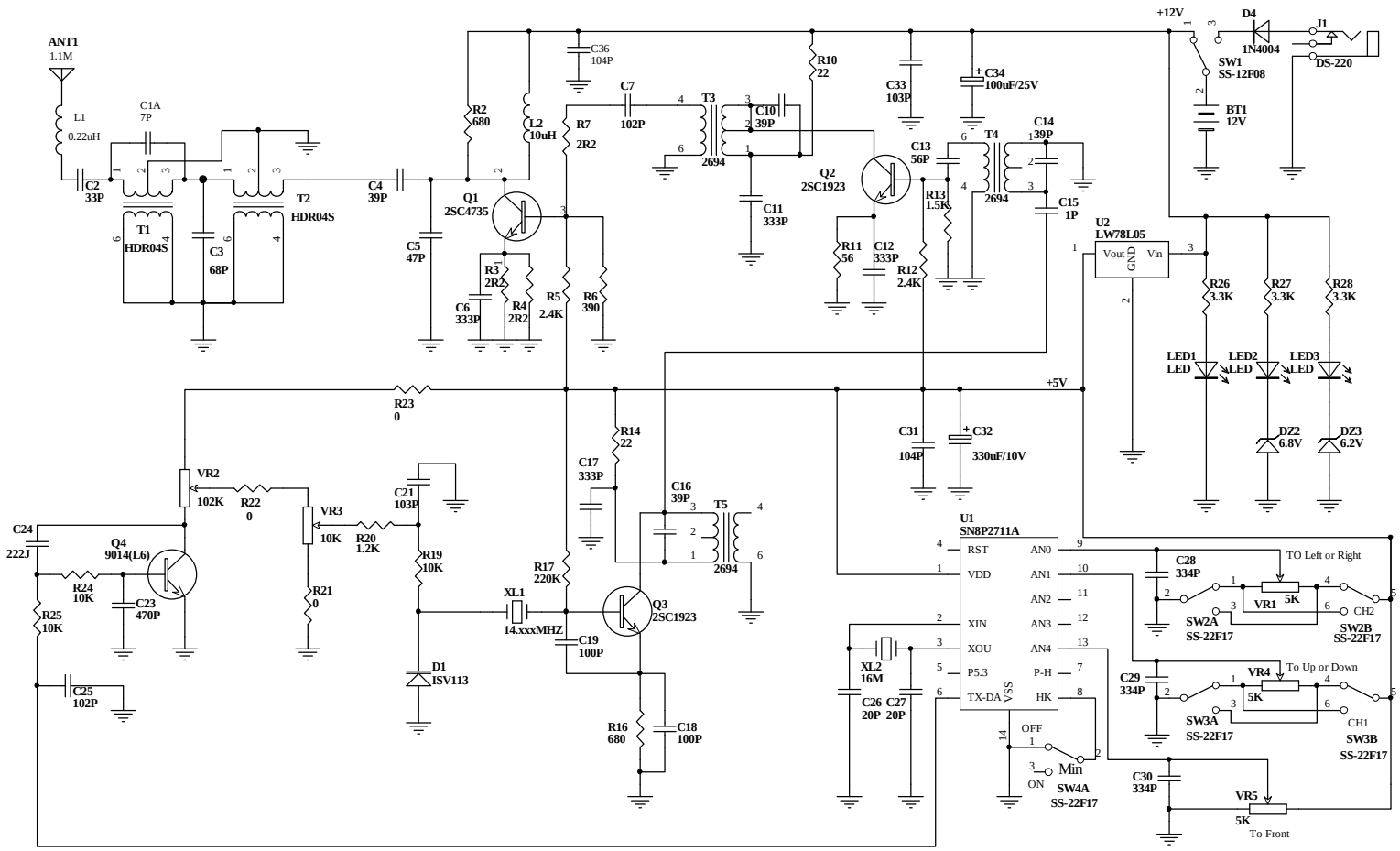

Title	COX HOBBIES ICON TRANSMITTER M45054064	
Size B	Number	Revision SCH V100505
Date: 7-Oct-2005	Sheet of	
File: C:\Present Projects\..\COX ICON TRANSMITTER M45054064.SCH	Drawn By: Mike Dorffler	

PDF created with pdfFactory Pro trial version www.pdffactory.com