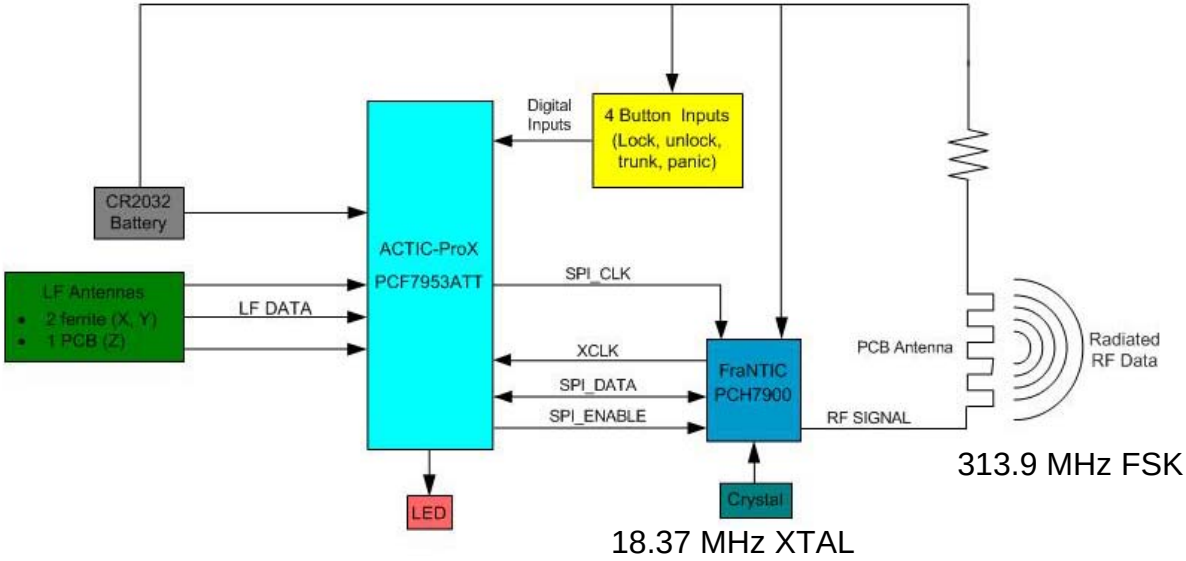
Digital Inputs
4 Button Inputs (Lock, unlock, trunk, panic)
CR2032 Battery
ACTIC-ProX
PCF7953ATT
LF Antennas
2 ferrite (X, Y)
1 PCB (Z)
LF DATA
SPI_CLK
XCLK
SPI_DATA
SPI_ENABLE
FraNTIC
PCH7900
PCB Antenna
Radiated RF Data
RF SIGNAL
313.9 MHz FSK
LED
Crystal
18.37 MHz XTAL