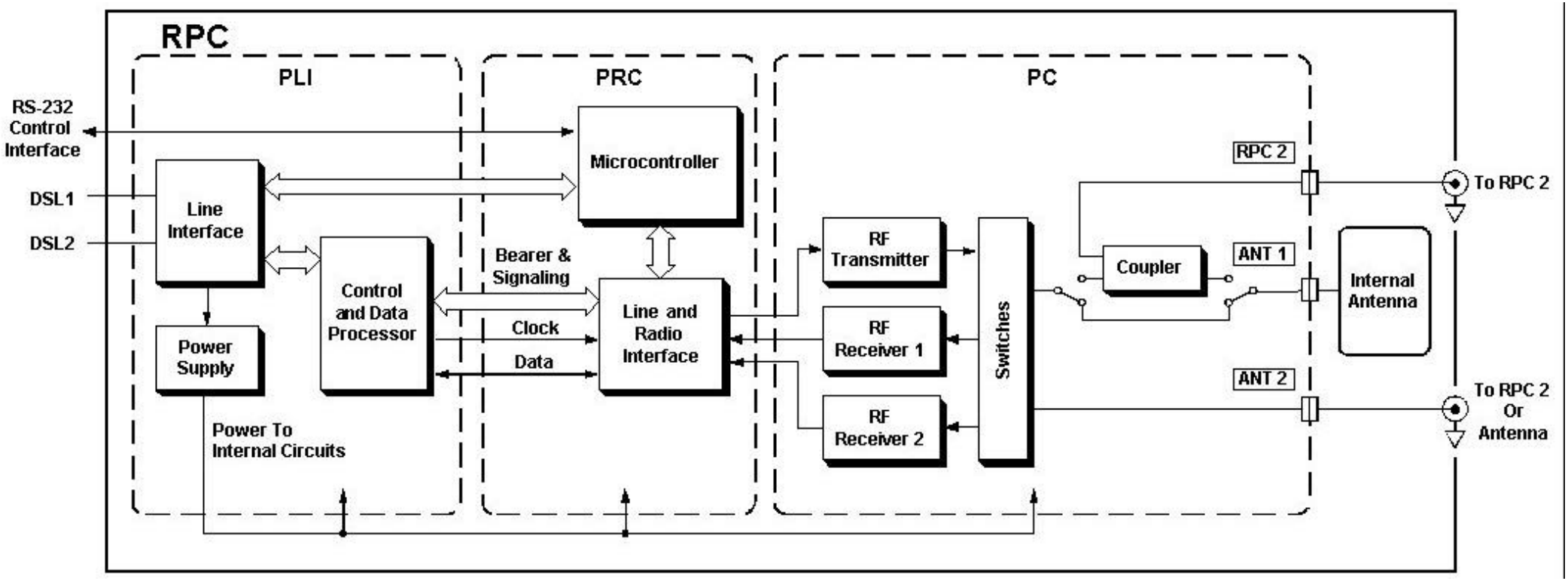

The modules of the RPC contain several frequency generation circuits.

The PLI module contains crystal of 15.36MHz.

The RF Module (namely the PC module) contains the following crystals: 14MHz, 56.238MHz.

The PRC module contains crystal of 24MHz.