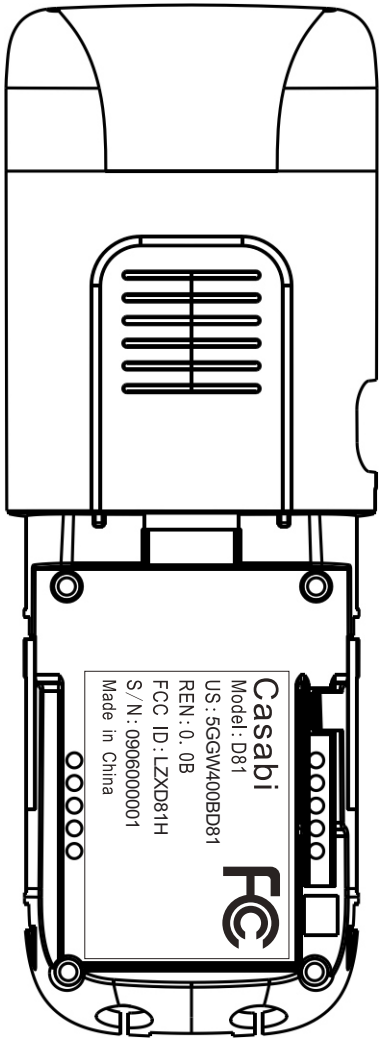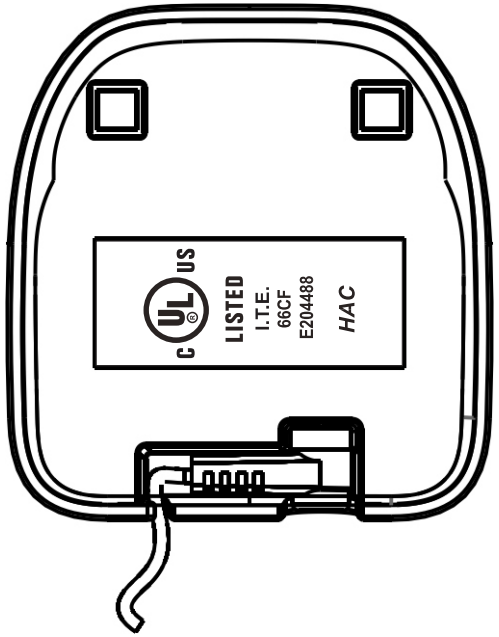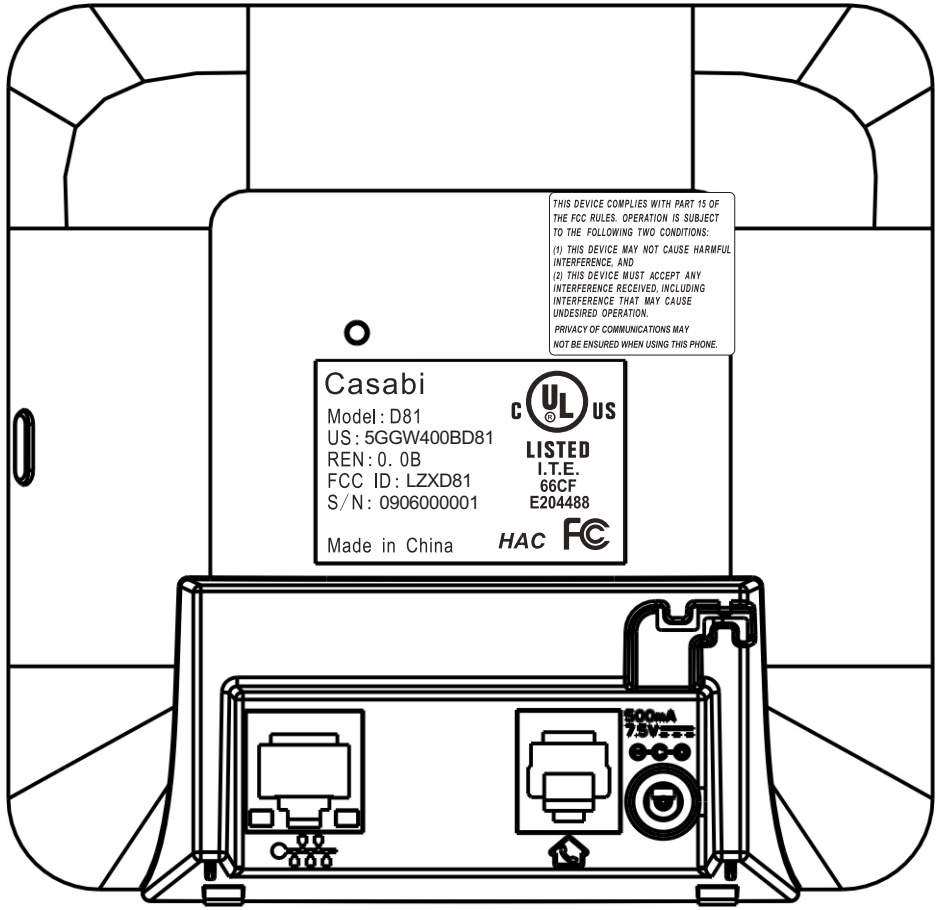D81SA-USA LABEL Drawing
Date:17-Jun-2009