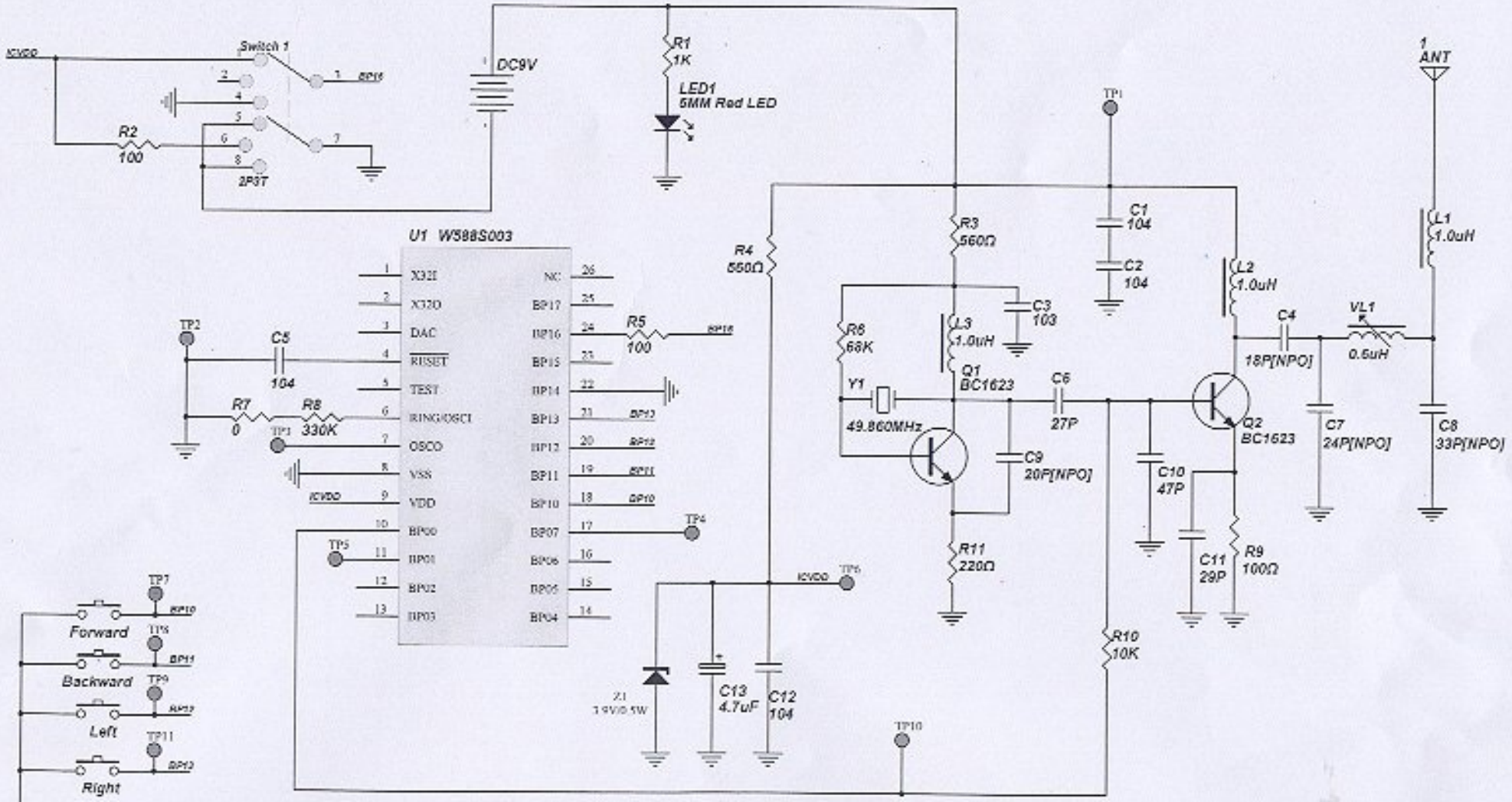

TAI NAM INDUSTRIAL COMPANY LTD

#297666	SAND SEA R/C
EL-609-49TX	
FCC [1.0]	