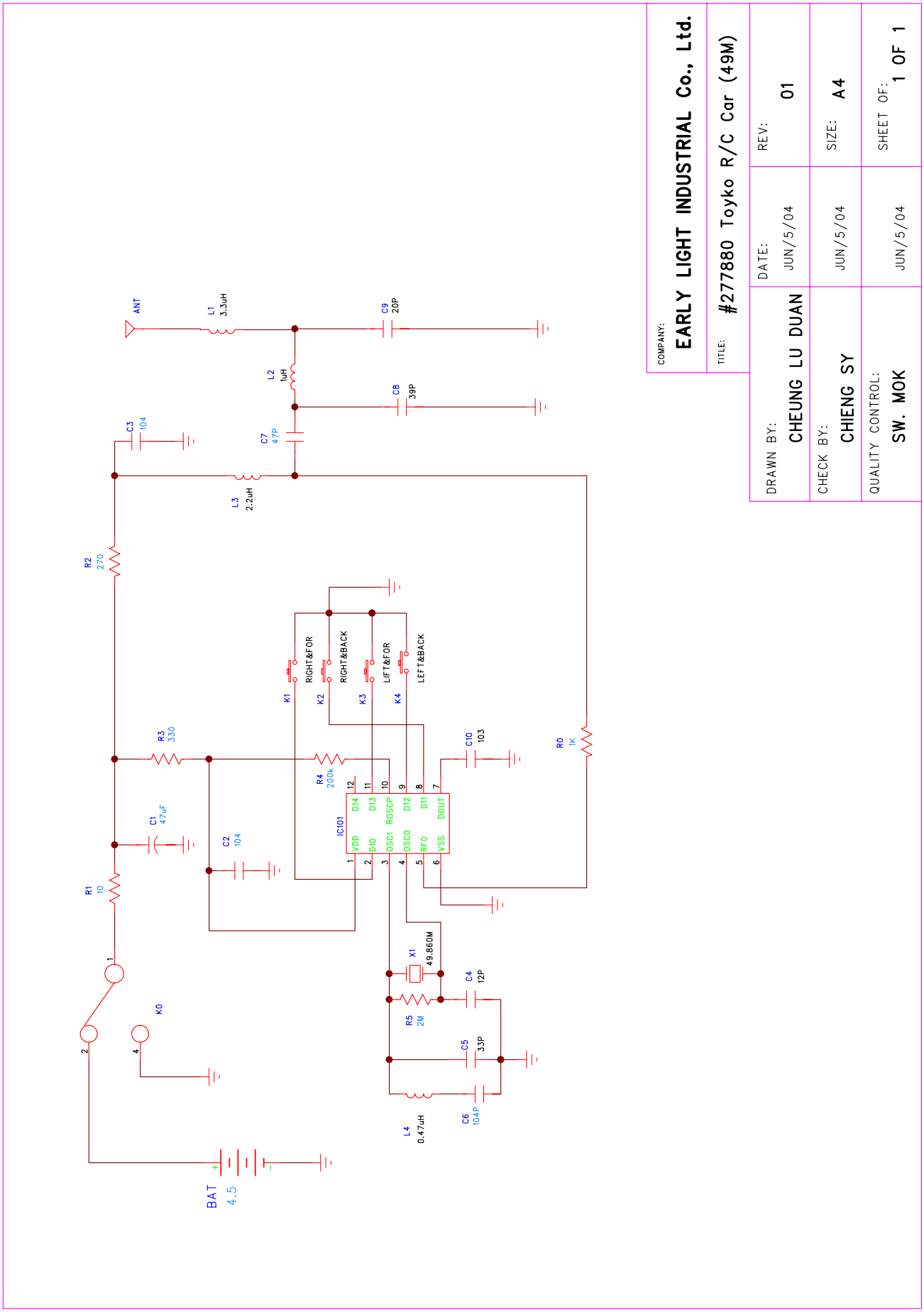
ANT
L1 3.3uH
C9 20P
L2 1uH
C8 39P
C3 104
C7 47P
L3 2.2uH
R2 270
RIGHT&FOR
RIGHT&BACK
LIFT&FOR
LEFT&BACK
K1
K2
K3
K4
R3 330
C10 103
R0 1K
R4 200k
IC101
D14
D13
ROSCP
D12
D11
DOUT
VDD
D10
OSC1
OSCO
RFO
VSS
C1 47uF
C2 104
R1 10
X1 49.860M
C4 12P
R5 2M
C5 33P
K0
L4 0.47uH
C6 104P
BAT 4.5
COMPANY: EARLY LIGHT INDUSTRIAL Co., Ltd.
TITLE: #277880 Toyko R/C Car (49M)
REV: 01
DATE: JUN/5/04
SIZE: A4
SHEET OF: 1 OF 1
DRAWN BY: CHEUNG LU DUAN
CHECK BY: CHIENG SY
QUALITY CONTROL: SW. MOK