SCHEMATIC DIAGRAM

REV:	DETAIL OF CHANGE	DATE	PREPARED	CHECKED	APPROVED

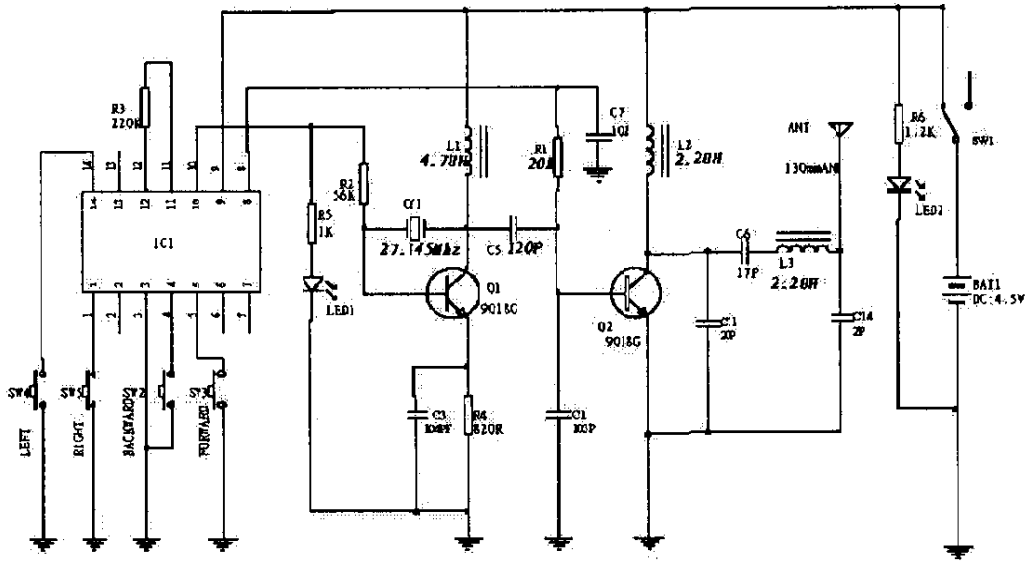

27.145M

FCC-X

SUNLIGHT ELECTRONIC TOYS MFR CO. LTD.	
PRODUCT NUMBER: MG4-X	DRAWN: LBC (FCC-X)
PRODUCT NAME: 27M 發射	CHECKED:
PAGE 1 OF 1	APPROVED: