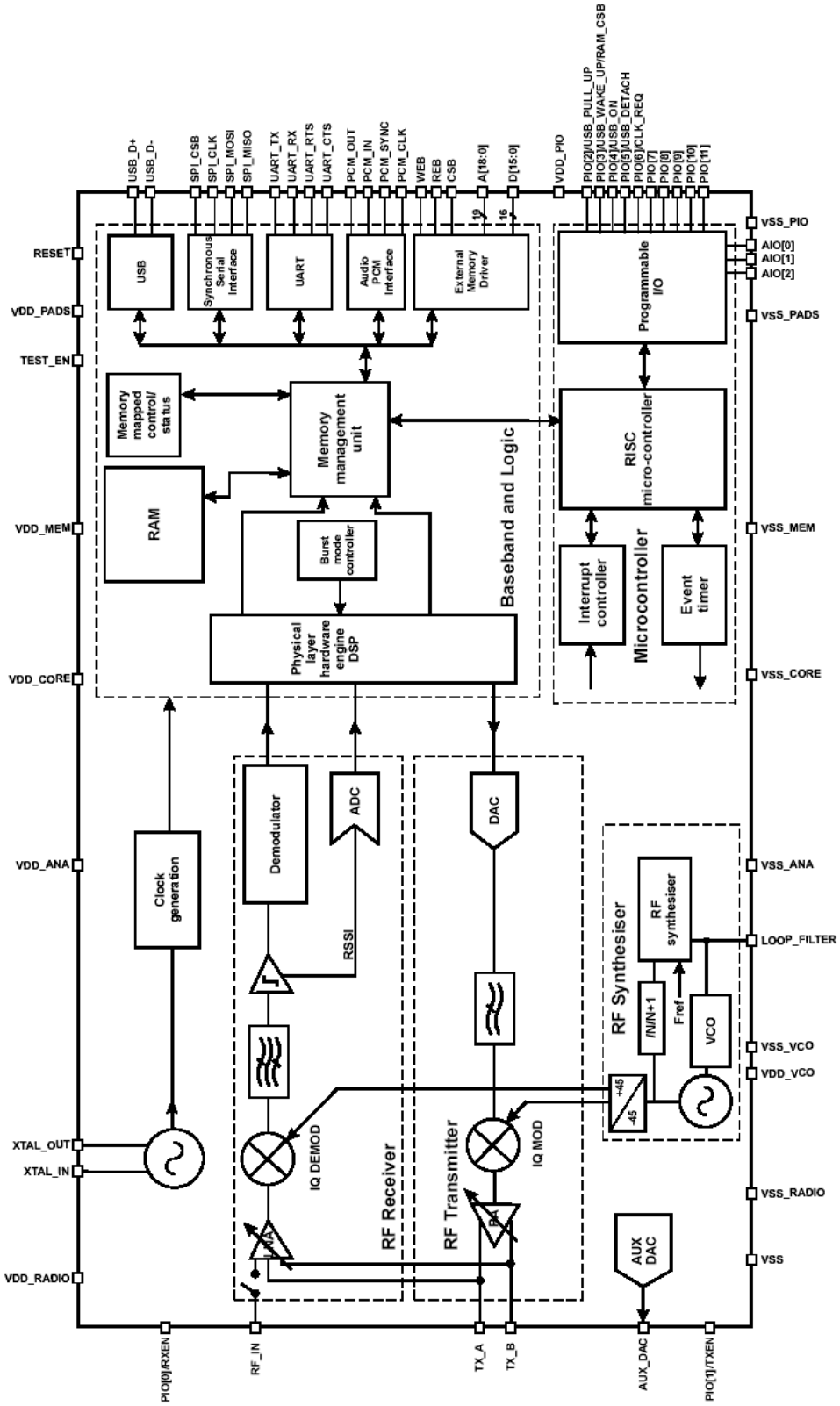Device Diagram