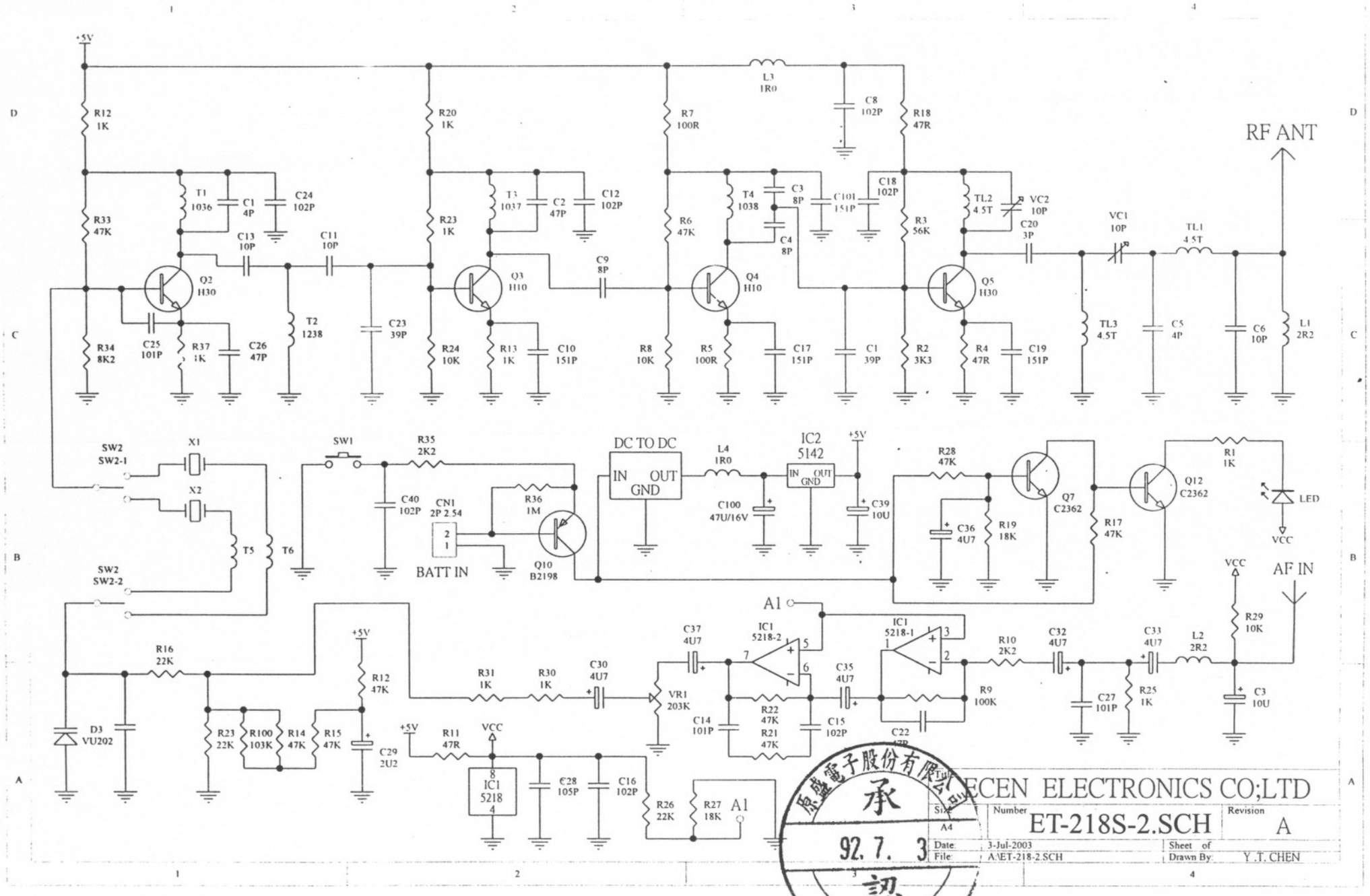
+5V
R12 1K
R33 47K
T1 1036
C1 4P
C24 102P
C13 10P
C11 10P
Q2 H30
R34 8K2
C25 101P
R37 1K
C26 47P
T2 1238
C23 39P
R20 1K
R23 1K
T3 1037
C2 47P
C12 102P
Q3 H10
R24 10K
R13 1K
C10 151P
C9 8P
R7 100R
L3 1R0
C8 102P
R18 47R
R6 47K
T4 1038
C3 8P
C4 8P
C101 151P
C18 102P
Q4 H10
R8 10K
R5 100R
C17 151P
C1 39P
R3 56K
TL2 4.5T
VC2 10P
C20 3P
Q5 H30
R2 3K3
R4 47R
C19 151P
VC1 10P
TL1 4.5T
TL3 4.5T
C5 4P
C6 10P
L1 2R2
RF ANT
SW2 SW2-1
X1
X2
T5
T6
SW2 SW2-2
SW1
R35 2K2
C40 102P
CN1 2P 2.54
BATT IN
R36 1M
Q10 B2198
DC TO DC
IN OUT GND
L4 1R0
C100 47U/16V
IC2 5142
IN OUT GND
C39 10U
R28 47K
C36 4U7
R19 18K
Q7 C2362
R17 47K
Q12 C2362
R1 1K
LED
VCC
AF IN
R16 22K
D3 VU202
R23 22K
R100 103K
R14 47K
R15 47K
R12 47K
C29 2U2
R31 1K
R30 1K
C30 4U7
VR1 203K
C37 4U7
IC1 5218-2
C14 101P
R22 47K
R21 47K
C15 102P
C35 4U7
A1
IC1 5218-1
R9 100K
C22 47P
R10 2K2
C32 4U7
C27 101P
C33 4U7
R25 1K
L2 2R2
R29 10K
C3 10U
R11 47R
IC1 5218
C28 105P
C16 102P
R26 22K
R27 18K
A1
ECEN ELECTRONICS CO;LTD
Size A4
Number ET-218S-2.SCH
Revision A
Date: 3-Jul-2003
File: A:\ET-218-2.SCH
Sheet of
Drawn By: Y.T. CHEN
承
92. 7. 3
認
開發部