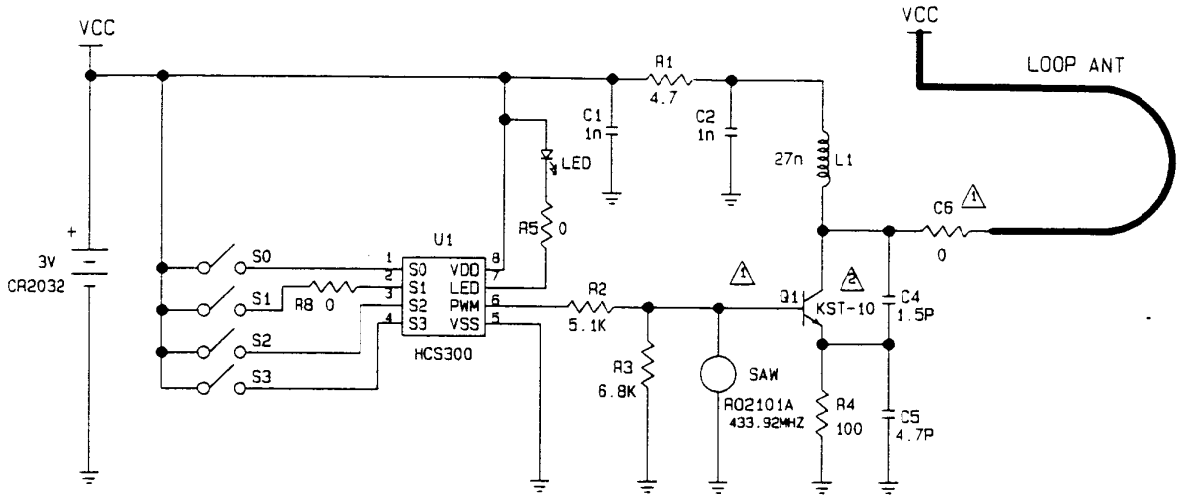

MODEL	VECTRA R.K.E , TOAD A50, A100+, A200+			
PCB	8D5760A			
NOTE:	VECTRA R.K.E	A50	TOAD A100+	A200+
LED	RED	GREEN	GREEN	GREEN
BUTTON	2 KEY (S0, S1)			4KEY (S0, S1, S2, S3)
	USE RUBBER PAD			

REV.	DATE	DESCRIPTION	BY	APPR.
02	02/23/98	CHANGE Q1 KST-10, Q1 WAS BFS17	Jacky	Sunny
01	04/10/97	CANCEL C3 0.5P, 0 OHM WAS R6	JACKY	SUNNY

MATERIAL:

FINISH:

LITE-ON AUTOMOTIVE CORPORATION
NO.37, CHUNG YANG, RD, NEPZ.
KAOHSIUNG, TAIWAN

SCALE:

DATE: 02-19-97

APPROVED BY: SIMON

DRAWN BY: FANN

REVIEWED: JACKY

SHEET 1 OF 1

TOLERANCES UNLESS OTHERWISE SPECIFIED

TITLE: 433.92MHZ Tx (2 KEY)

DRAWING NUMBER: SK 73370

FMC5010 1.0

* CRITICAL DIMENSION