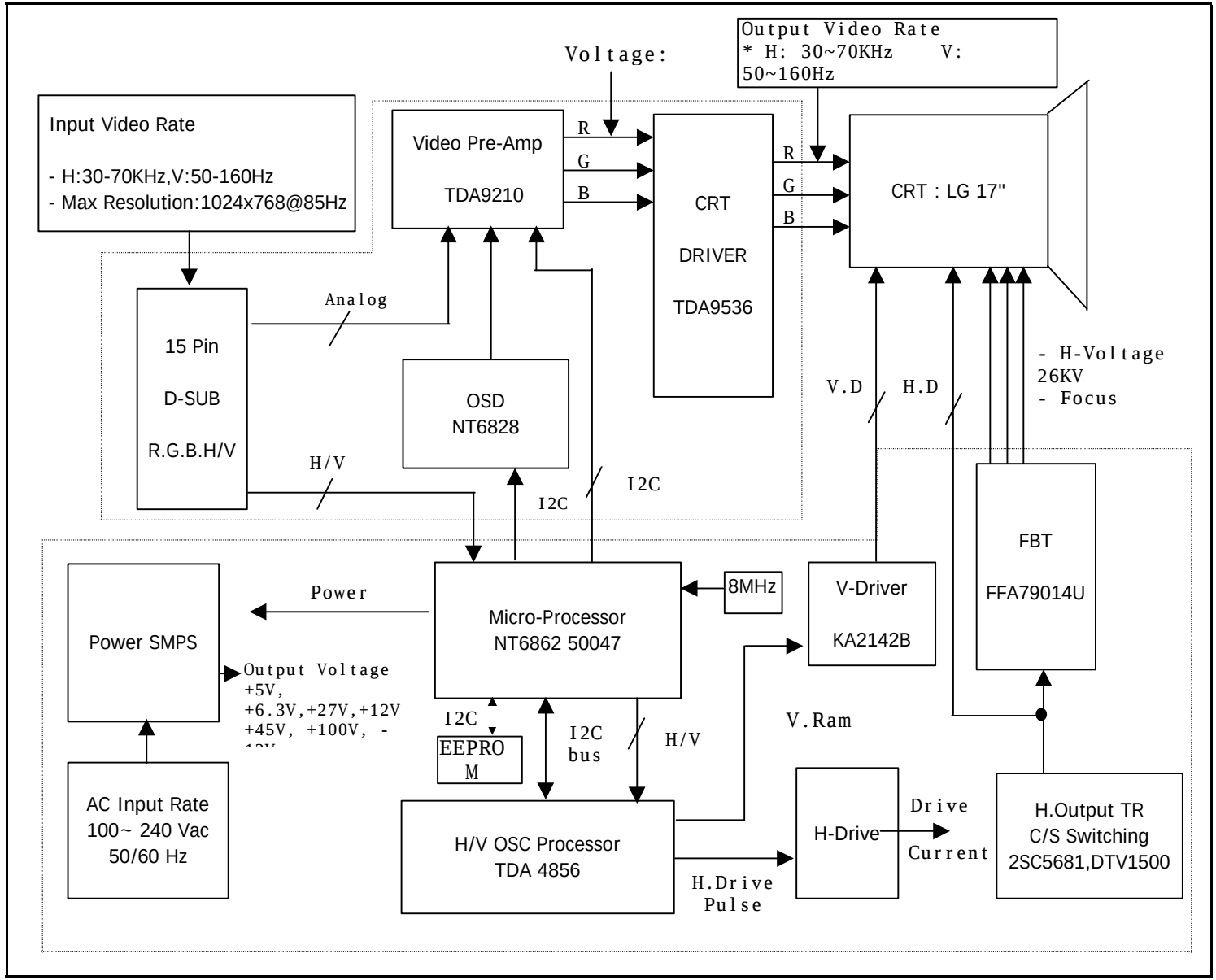JS-701 BLOCK DIAGRAM