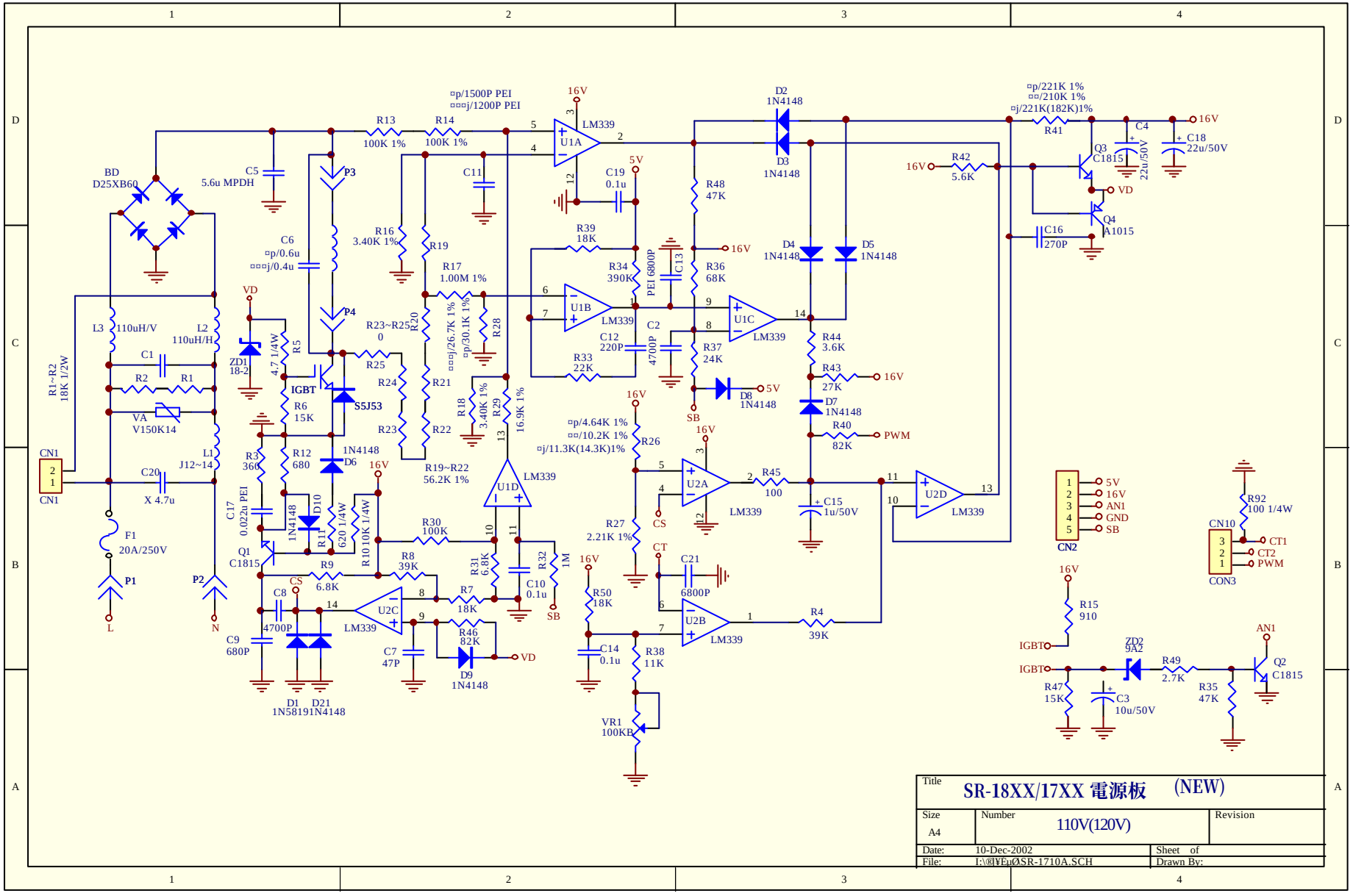

Title	SR-18XX/17XX 電源板 (NEW)	
Size A4	Number 110V(120V)	Revision
Date: 10-Dec-2002		Sheet of
File: I:\®Ì¥Eµ©SR-1710A.SCH		Drawn By: