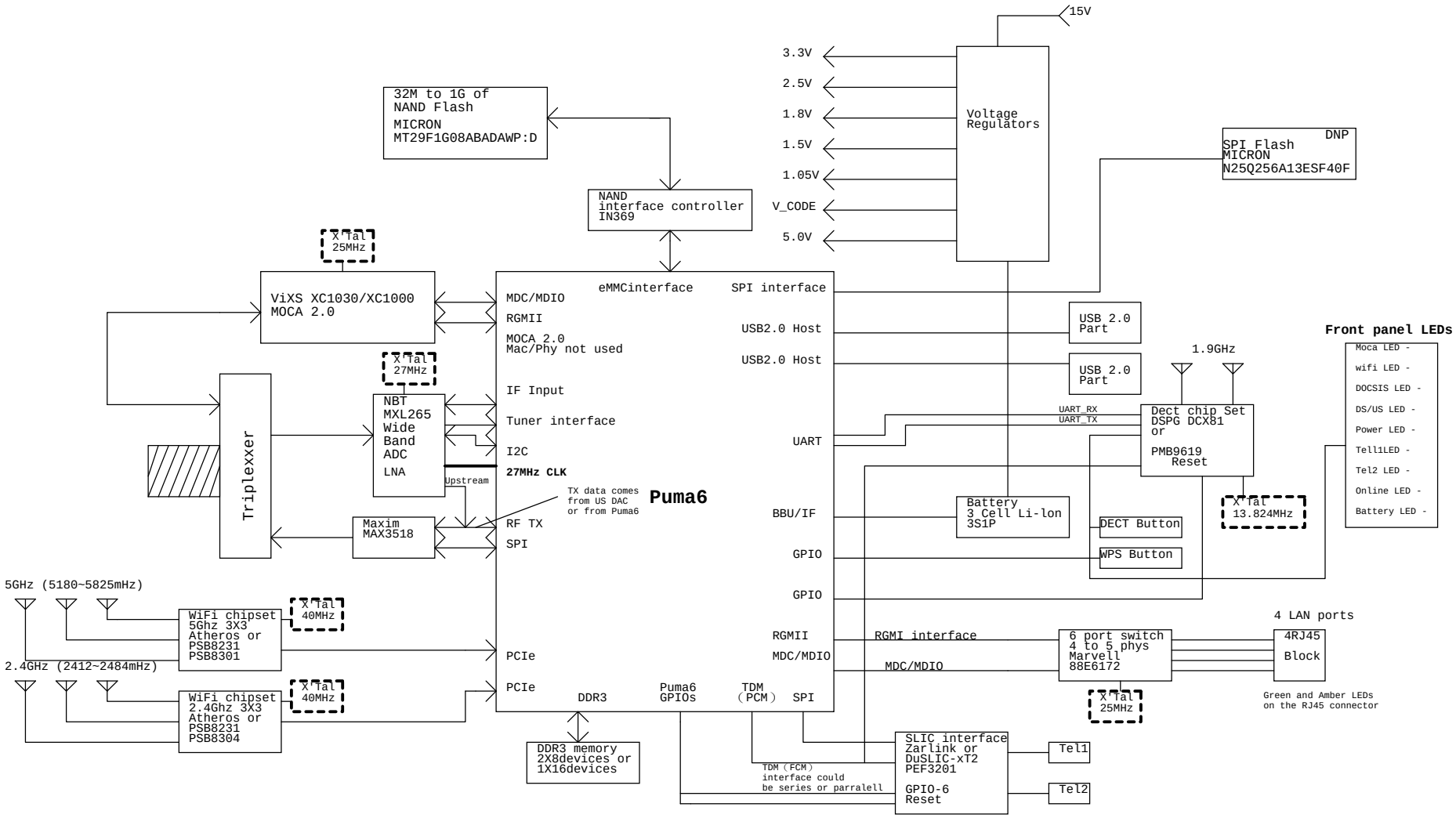

PEGATRON	Title : CABLE MODEM		
02-BLOCK DIAGRAM	Engineer: Tyrik_Li		
Size: Custom	Project Name: DPC3939_P2		Rev: 7.00
Date: Wednesday, March 06, 2013	Sheet 2 of 27		