Exhibit : Antenna Location

Cisco Systems, Inc.
170 West Tasman Drive
San Jose, CA 95134-1706
Phone 408 526-4000
Fax: 408 526 –4100
http://www.cisco.com

Model: CGR1240
FCC ID: LDKALTMT0556
IC ID: 2461B-ALTMT0556
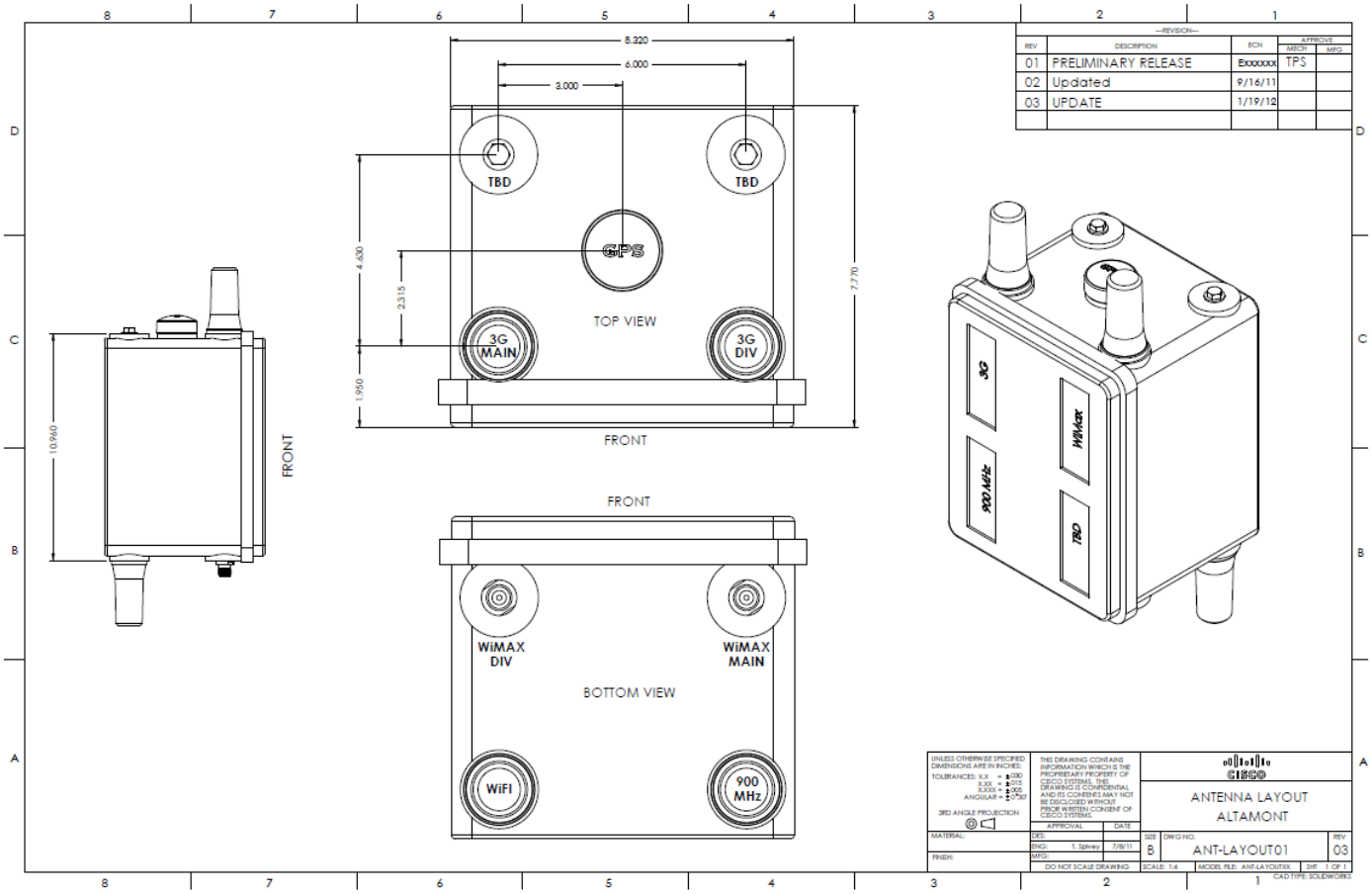
The dimensions are in inches .