System Interconnection
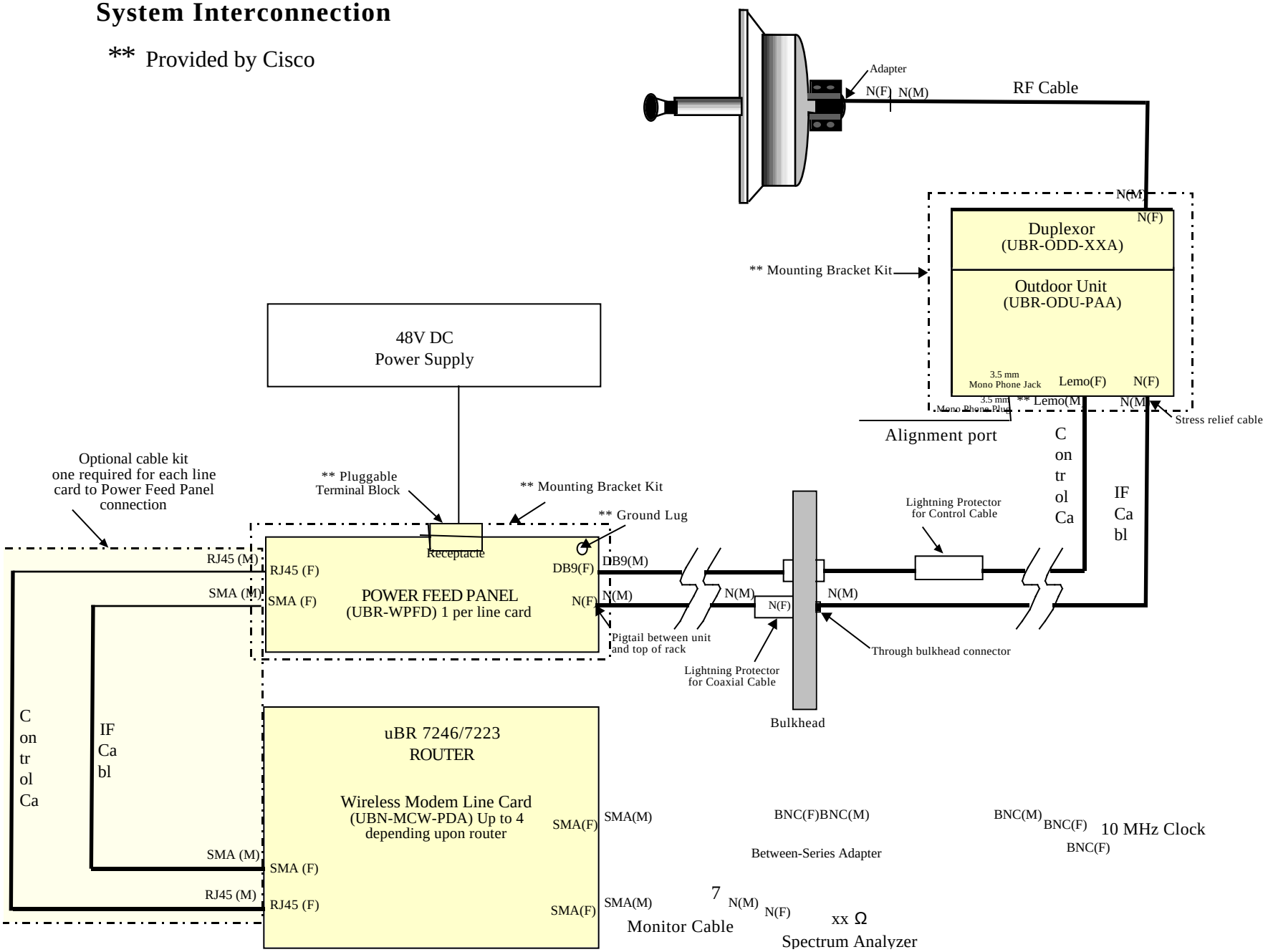
** Provided by Cisco