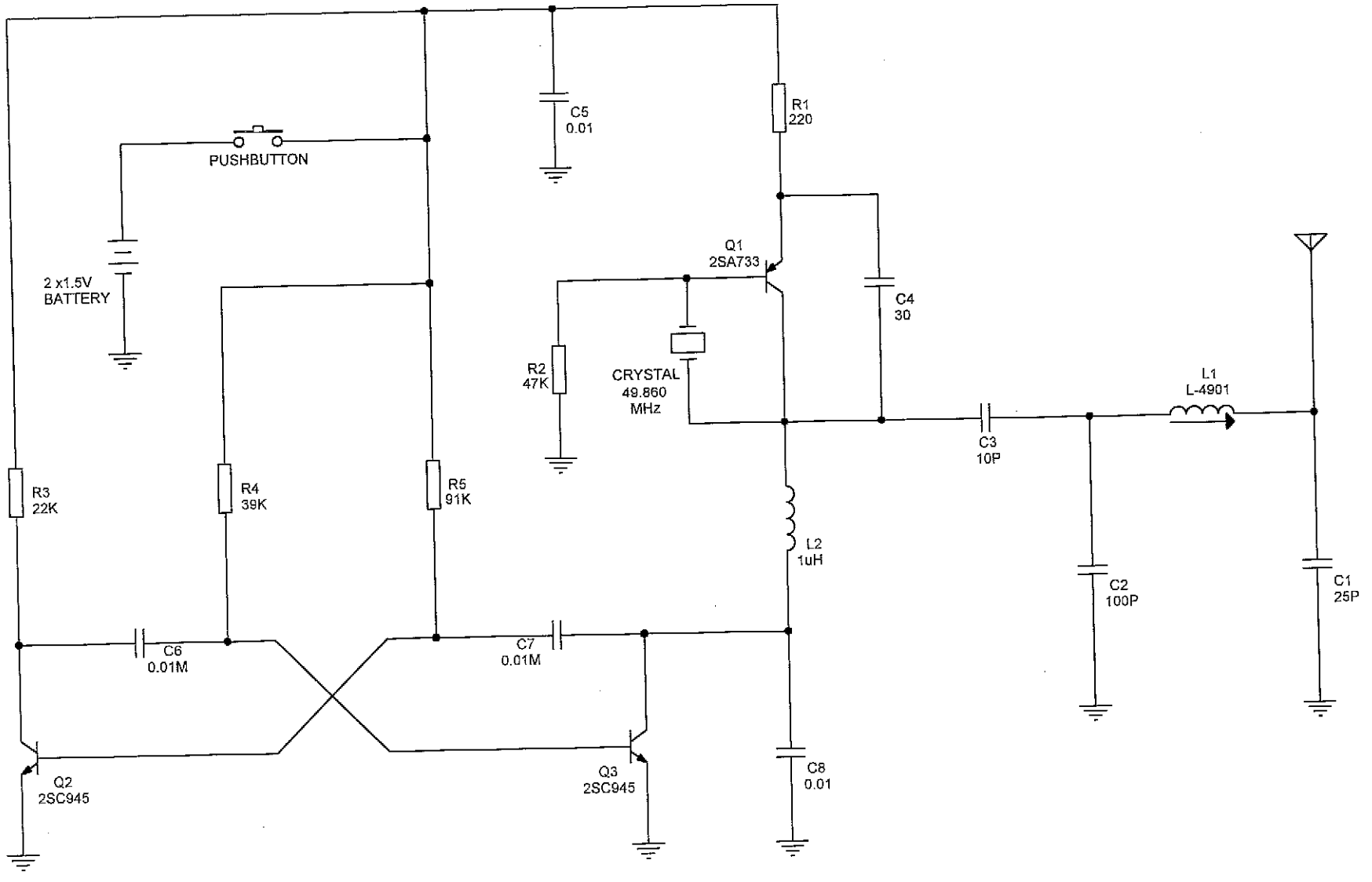

Note:

1. All resistance values are indicated in "ohm"
   (Mohm=1,000Kohm ; Kohm=1,000 ohm)
2. All capacitance values are indictaed in "uF"
   (uF=1,000nF ; nF=1,000pF)

Baja Racer Tx

Model: S84002 Tx

Lab Ltd.,: IECC

V:\R&D\EDDY\RC CAR LAB TEST\1-18RC\1F BAJA RACER S84002\EMC\01T49MFCC01.IECCEMC.DSN

ARTIN Industrial Co., Ltd.

Title	(BATTERY: 2 x 1.5V "AA")		15-04-2003
	SINGLE FUNCTIONS RADIO CONTROL CAR		
Size A4	Document Number	MCS: 317002046	Rev 01
	TRANSMITTER 49.860Mhz (PCB ST-4308)		
Revise Date:	Tuesday, April 15, 2003	Sheet 1 of 1	

No 3 3 7 0 8
16 APR 2003