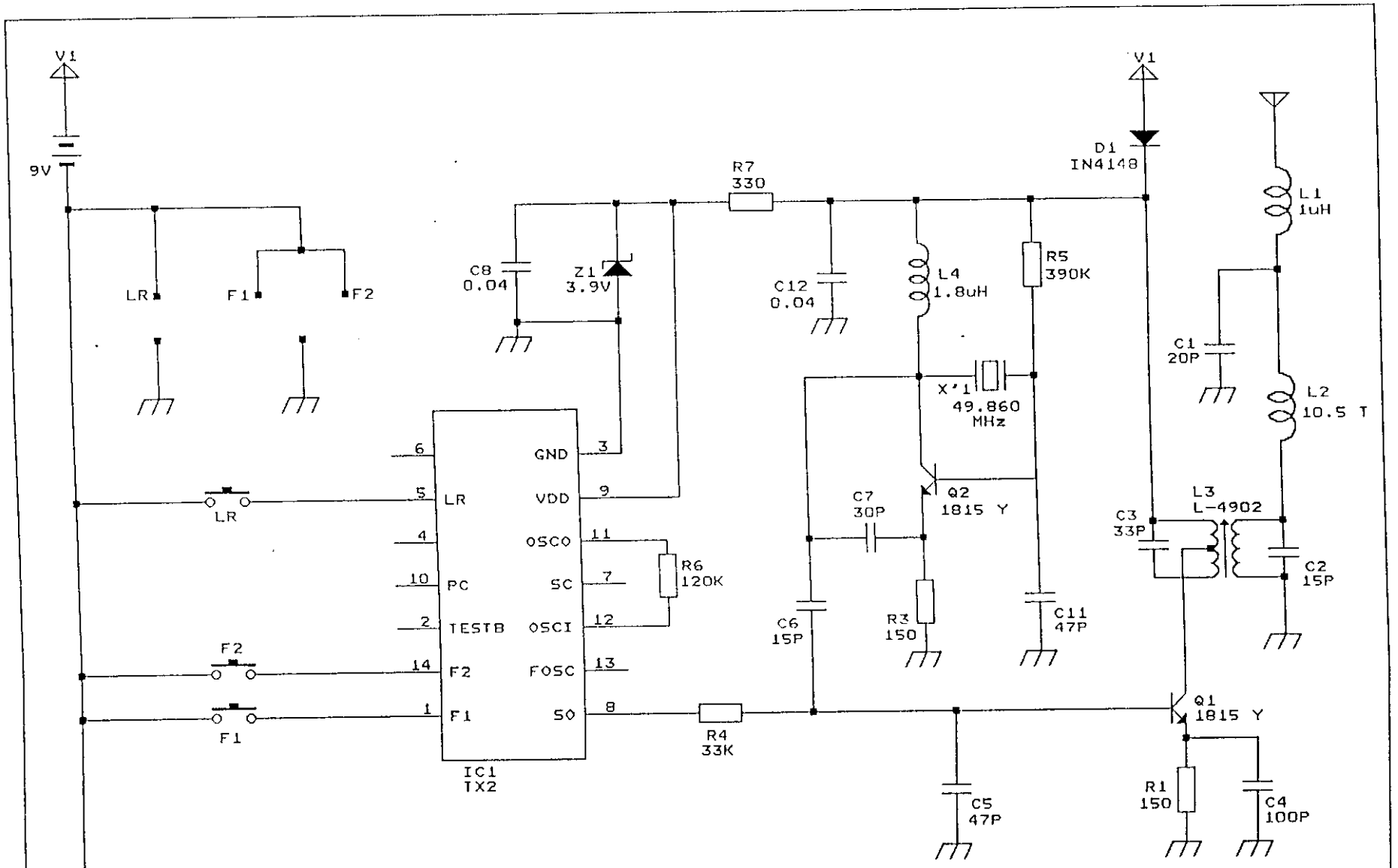


Notes:

1. All resistance values are indicated in "ohm"
2. All capacitance values are indicated in "uF"

| | | |
|---|---|---|
| ARTIN Industrial Co.,Ltd. | | |
| P/N: | | |
| Title | (BATTERY 1* 006P 9V)<br>TWO SPEED FCR (TX2) | |
| Size A | Document Number (P.C.B. ST-8705)<br>Transmitter (49.860MHz) | REV 02 |
| Date: April 7, 1998 | Sheet 1 of 1 | |

18 JUN 1998
No. 15778