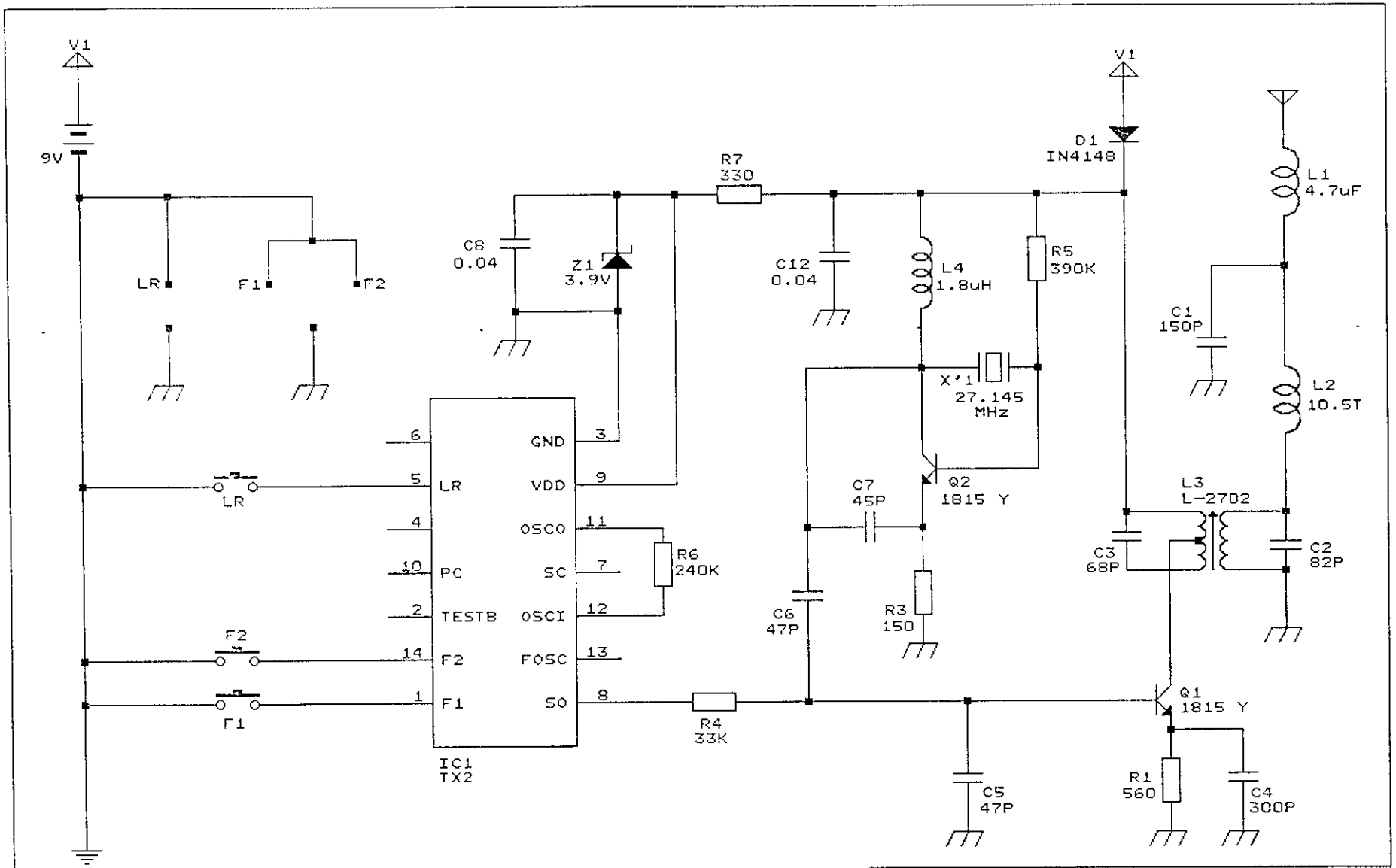

Notes:

1. All resistance values are indicated in "ohm"
2. All capacitance values are indicated in "uF"

ARTIN Industrial Co.,Ltd.			
P/N:			
Title	(BATTERY 1* 006P 9V) TWO SPEED FCR (TX2)		
Size A	Document Number (P.C.B. ST-8705) Transmitter (27.145MHz)		REV 02
Date: April 7, 1998	Sheet 1 of 1		