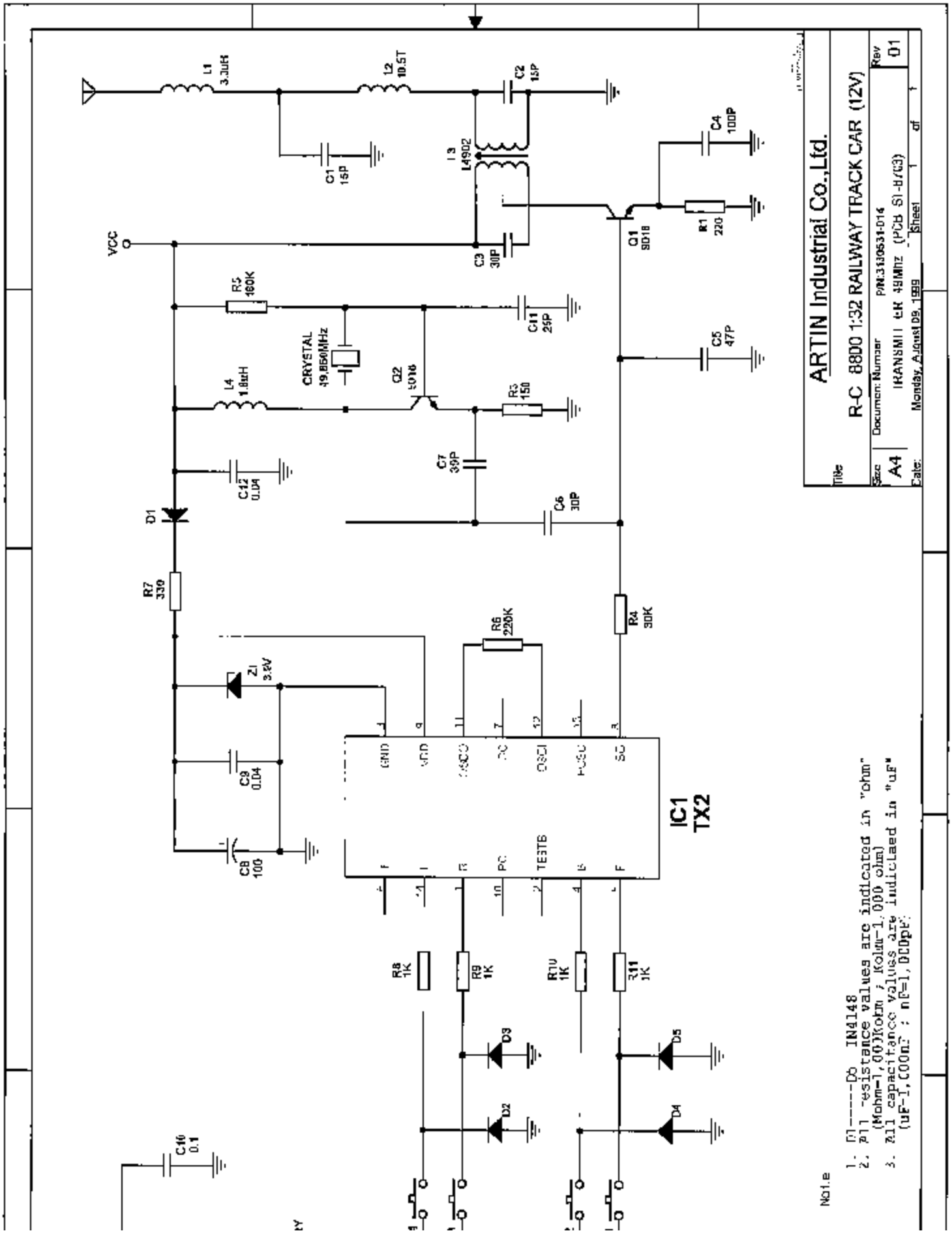
ARTIN Industrial Co.,Ltd.
R-C 88D0 1:32 RAILWAY TRACK CAR (12V)
Rev 01
Document Number
P/N:310531-014
IKANSMII 4M 49MHz (PCB SI-B/G3)
Sheet 1 of 1
Monday, August 09, 1999
Size A4
Date:
Title
VCC
L1 3.3uH
L2 10.5T
C2 15P
C1 15P
T3 L4902
C4 100P
C3 30P
Q1 9018
R1 220
R5 180K
C11 25P
C5 47P
CRYSTAL 49.860MHz
Q2 5016
L4 1.8uH
R3 150
C7 39P
C12 0.04
C6 30P
D1
R7 330
R6 220K
R4 30K
Z1 3.9V
C9 0.04
C8 100
IC1
TX2
GND
VDD
OSCO
OSCI
TESTB
R8 1K
R9 1K
R10 1K
R11 1K
D3
D2
D5
D4
C10 0.1
Note
1. D1-----D6 IN4148
2. All resistance values are indicated in "ohm" (Mohm=1,000Kohm ; Kohm=1,000 ohm)
3. All capacitance values are indicated in "uF" (uF=1,000nF ; nF=1,000pF)