NO.	REVISION	DATE	BY
0	-------	2003-4-17	ylnie

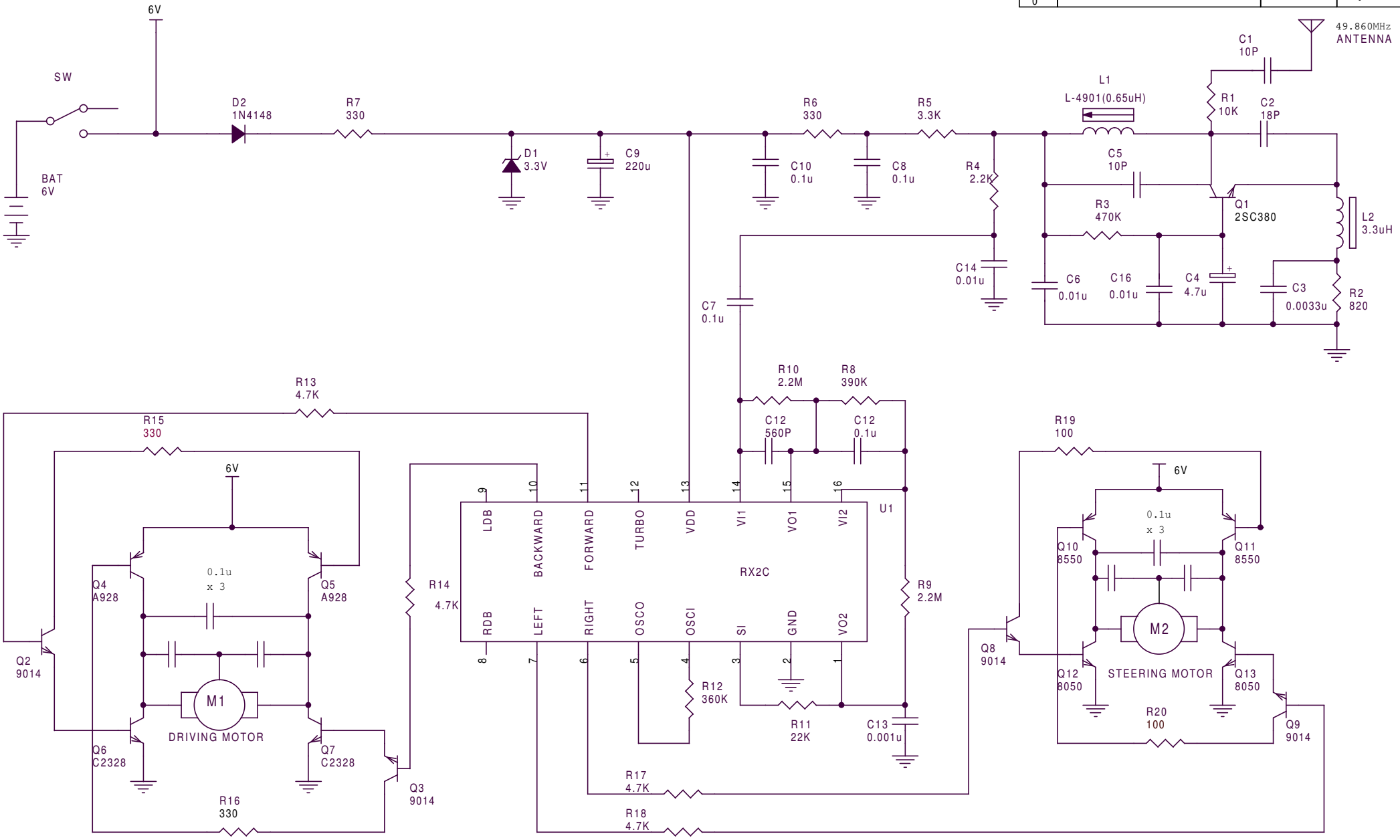

Note:

1.All resistance values are indicated in "ohm"
(Mohm=1,000Kohm ; Kohm=1,000 ohm)

2.All capacitance values are indictaed in "uF"
(uF=1,000nF ; nF=1,000pF)

Remote Control Receiver 49 RX
Model 764502
L9G 764502R

	DATE
DRAWN BY: ylnie	2003-4-17
CHECK BY:	
APPROVALS BY:	

ARTIN Industrial Co., Ltd.

Title: Remote Control Receiver 49 RX

DWG NO. 317002051-010 | MCS : 317002051-010 | Rev 0

Receiver 49MHz (PCB SR-7717)

Revise Date: Wednesday, August 31, 2005 Sheet 1 of 1