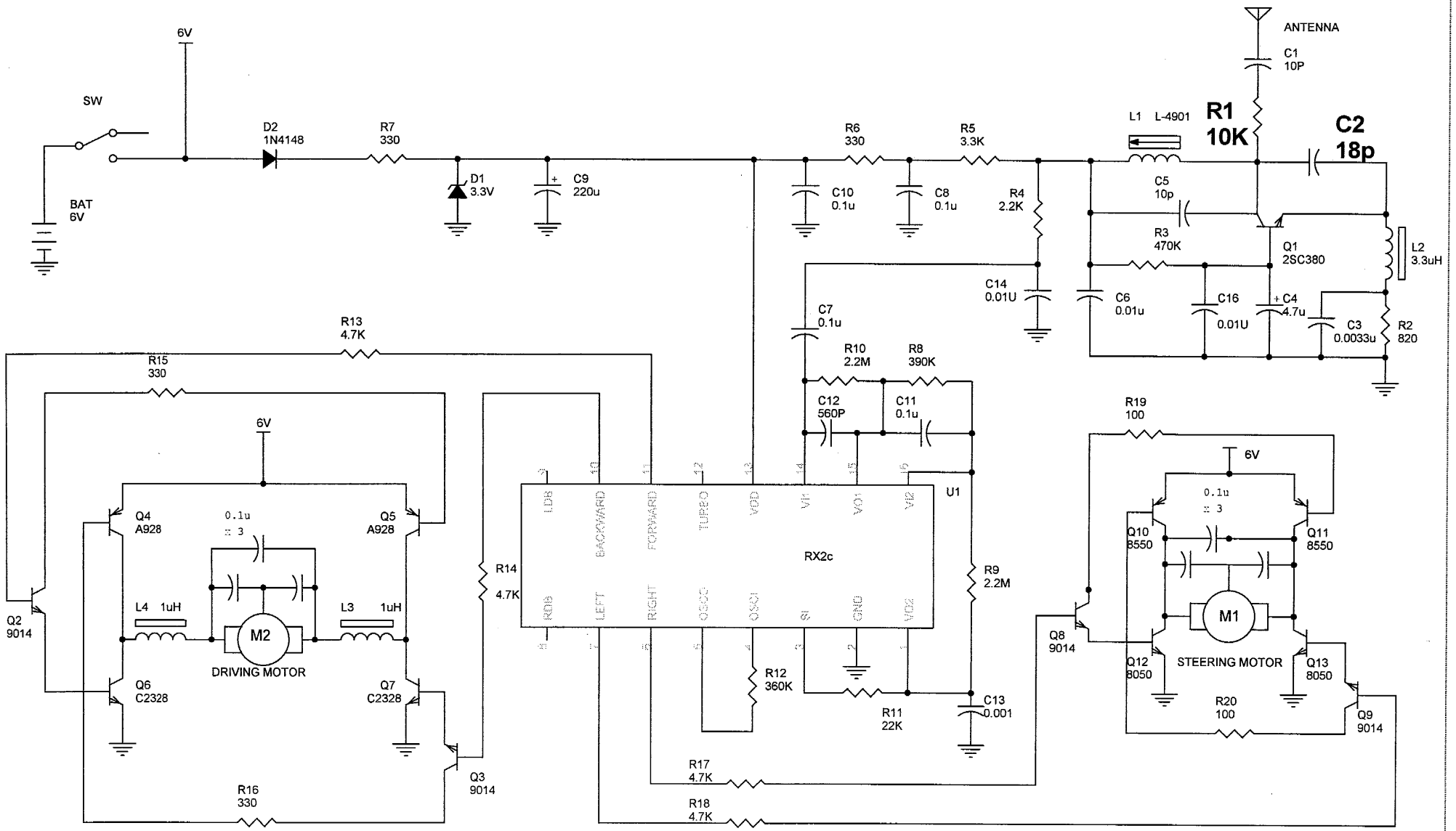

ARTIN Industrial Co., Ltd.			
Title	(BATTERY: 4 x1.5V "AA")		12-03-2002
FULL FUNCTION RADIO CONTROL CAR			
Size A4	Document Number	MCS: 317002051-010	Rev 02
	Receiver 49Mhz (PCB SR-7717)		
Revise Date: Thursday, December 11, 2003	Sheet 1 of 1		

№ 3 6 3 2 1
30 DEC 2001