NO.	REVISION	DATE	BY
0	----------	2004-04-09	ylnie

Note: 1. D1--D7 IN4148
2. All resistance values are indicated in "ohm" (Mohm=1,000Kohm ; Kohm=1,000 ohm)
3. All capacitance values are indicated in "uF" (uF=1,000nF ; nF=1,000 pF)

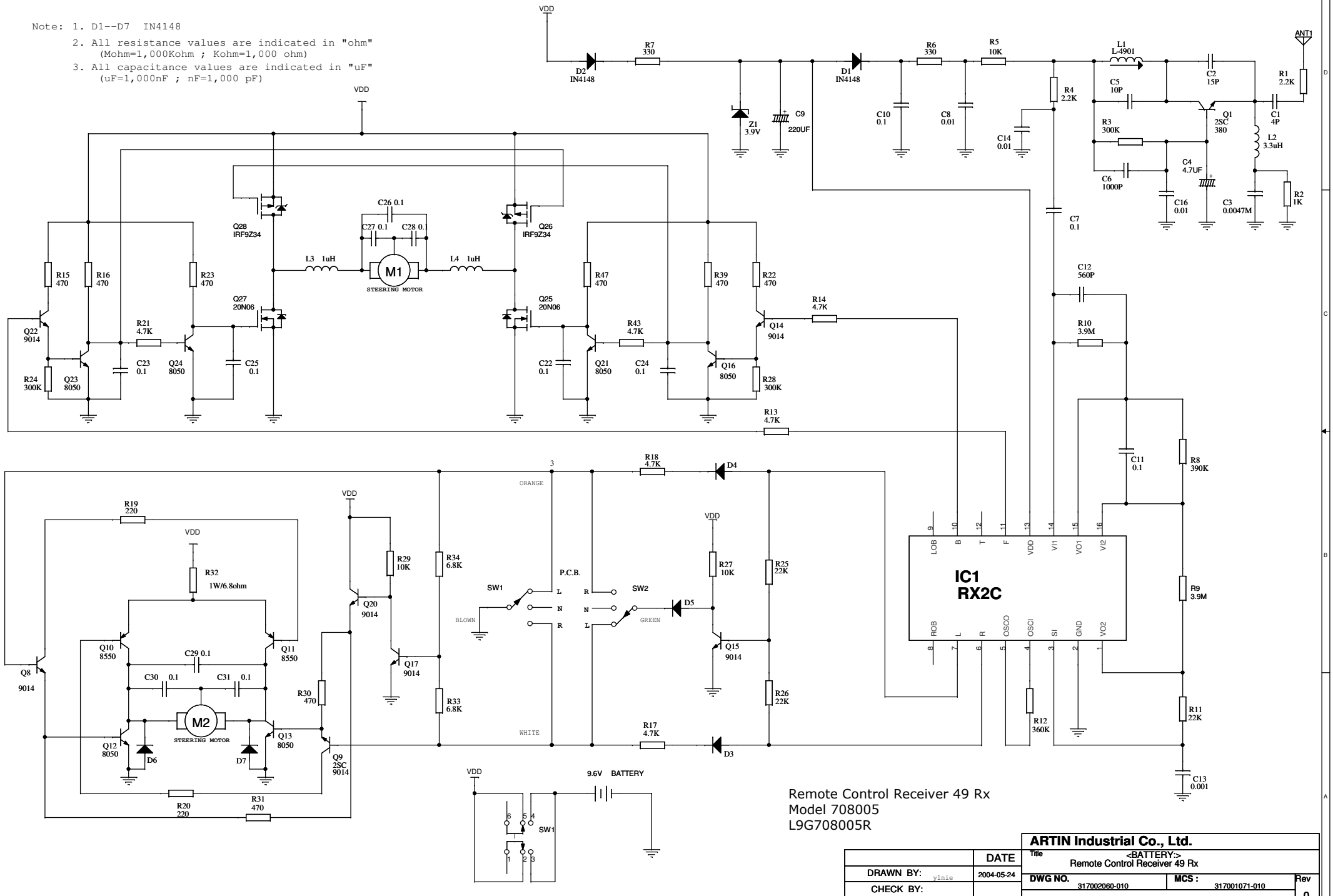

Remote Control Receiver 49 Rx
Model 708005
L9G708005R

	DATE
DRAWN BY: ylnie	2004-05-24
CHECK BY:	
APPROVALS BY:	

ARTIN Industrial Co., Ltd.

Title <BATTERY:>
Remote Control Receiver 49 Rx

DWG NO. 317002060-010 | MCS : 317001071-010 | Rev 0

RECEIVE 49Mhz (SR7724)

Revise Date: Monday, May 23, 2005 | Sheet 1 of 1