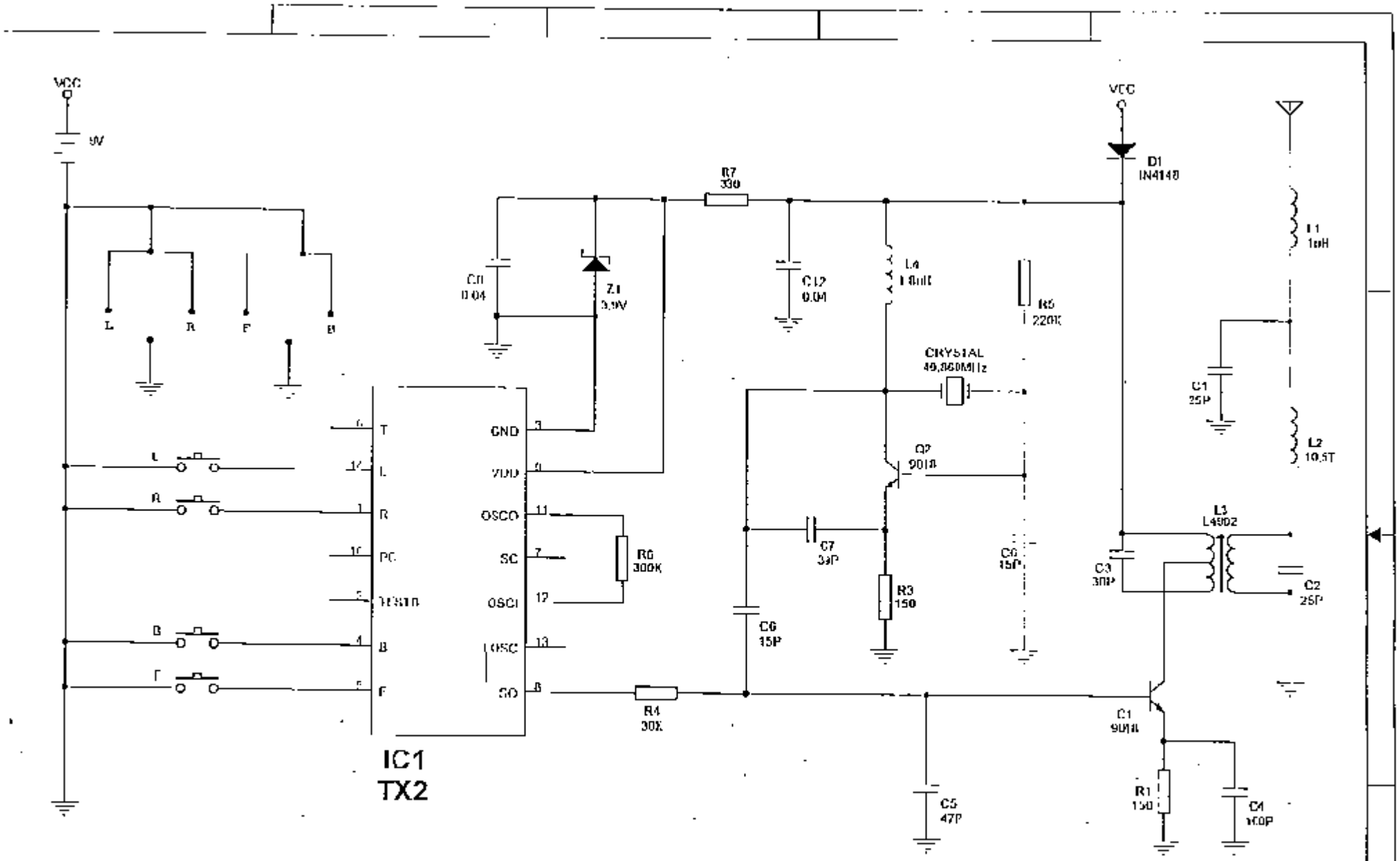

Note:

1. All resistance values are indicated in "ohm"
   (Mohm=1,000Kohm ; Kohm=1,000 ohm)
2. All capacitance values are indicated in "uF"
   (uF=1,000nF ; nF=1,000pF)

ARTIN Industrial Co.,Ltd.

Title: FULL FUNCTIONS RADIO CONTROL CAR

Size: A4 | Document Number: P/N:313053/ 001 | Rev: 01

TRANSMITTER 49MHz (PCB ST 8406)