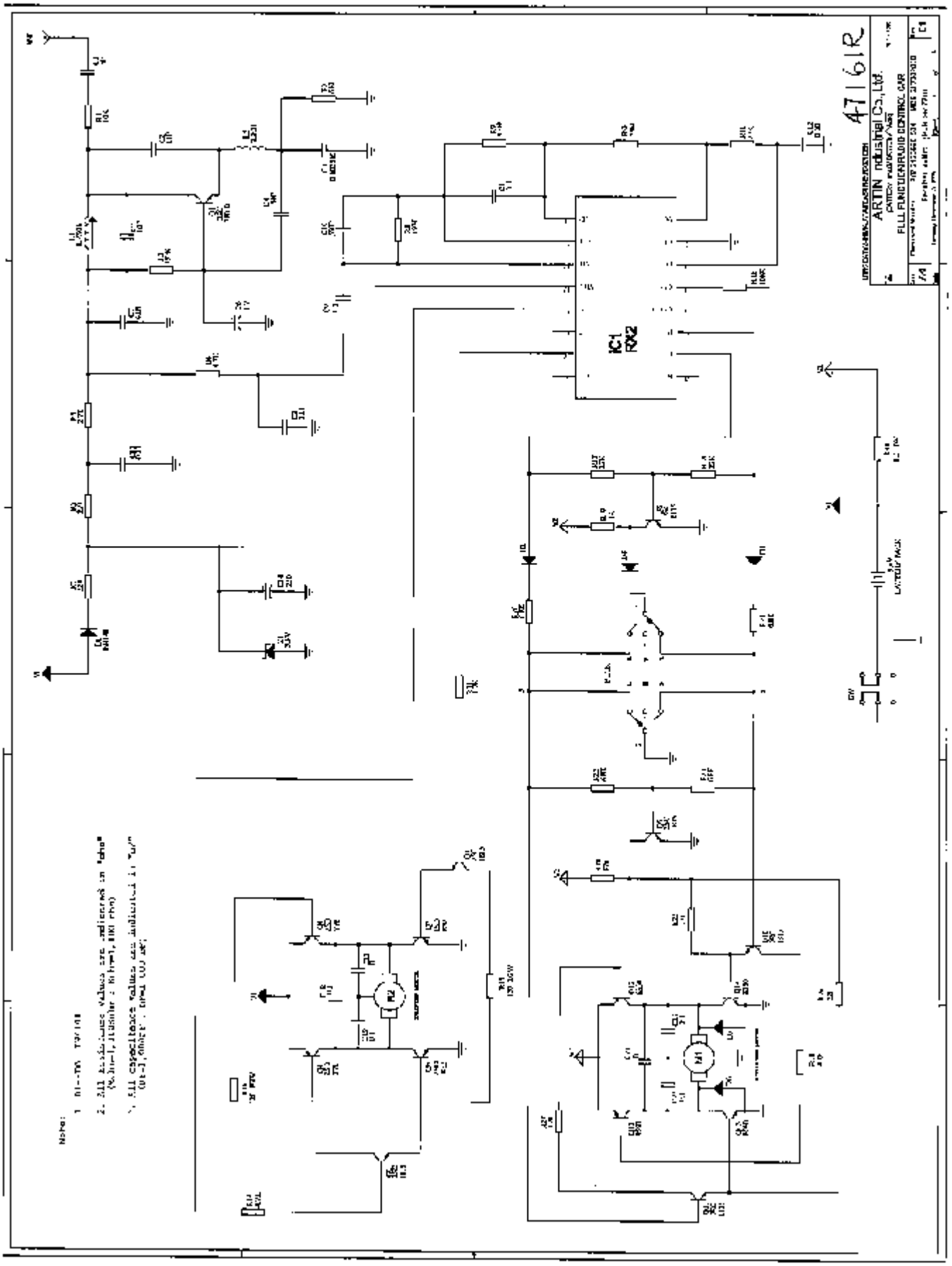
IC1
RX2
ARTIN Industrial Co.,Ltd.
FULL FUNCTION RADIO CONTROL CAR
Note: